# Service Manual

## LCD 显示器维修手册

**Custom：** **AOC**

**Model：** **831S**

# REVISION LIST

| Version | Release Date | Revision History | Model | TPV Model No |
|---|---|---|---|---|
| A00 | Jun-18-2010 | Initial Release | 831S | T8RSM5NQW5A1NNJ |
| | | | | T8RSM5NMW5A1NNJ |
| | | | | T8RSM5NCW5A2NNJ |
| | | | | T8RSM5NBW5A2NNJ |
| | | | | T8RMM5NCW5A2NNJ |
| | | | | T8RKM5NQW5A2NNJ |
| | | | | T8RKM5NMW5A4NNJ |
| | | | | T8RKM5NCW5A1NNJ |
| | | | | T8RKM5NBW5A2NNJ |
| | | | | T8RCM5NCW5A5NNJ |
| | | | | T8RCM5NCW5A13NJ |
| | | | | T8RCM5NBW5K2NNJ |
| | | | | T8RAM5NCW5A1NNJ |
| | | | | |
| | | | | |
| | | | | |
| | | | | |
| | | | | |
| | | | | |
| | | | | |
| | | | | |
| | | | | |
| | | | | |
| | | | | |
| | | | | |
| | | | | |
| | | | | |
| | | | | |
| | | | | |
| | | | | |
| | | | | |
| | | | | |
| | | | | |
| | | | | |
| | | | | |

# CONTENTS

**1. LCD Specifications ----------4**
1.1 Product Features ---------- 4
1.2 Factory Preset Timing ---------- 5

**2. Operation Instruction ----------6**
2.1 Control Button ---------- 6
2.2 OSD Menu Adjusting ---------- 7
2.3 OSD Lock Function ---------- 7

**3. Interface description ----------8**
3.1 VGA interface ---------- 8

**4. Panel Feature ----------9**
4.1 General Specifications ---------- 9
4.2 Electrical Absolute Ratings ---------- 9
4.3 Electrical Characteristics ---------- 10
4.4 Optical Characteristics ---------- 11
4.5 TFT LCD Module Block Diagram ---------- 11
4.6 LCD module input terminal pin assignment ---------- 12

**5. Block diagram ----------13**
5.1 LCD Block diagram ---------- 13
5.2 Main board Block diagram ---------- 13
5.3 Power board Block diagram ---------- 14
5.4 LCD software flow chart ---------- 15

**6. Circuit Schematic ----------16**
6.1 Main board ---------- 16
6.2 Power board ---------- 20
6.3 Invweter part ---------- 21
6.4 Key board ---------- 22

**7. Monitor exploded view ----------23**

**8. PCB Layout ----------26**
8.1 Main board ---------- 26
8.2 Power board ---------- 27
8.3 Key board ---------- 28

**9.** Maintainability **----------29**
9.1 Maintainability Requirement ---------- 29
9.2 Trouble Shooting ---------- 29
9.3 Factory mode OSD ---------- 33
9.4 DDC re-wirting step ---------- 34

**10. BOM List ----------37**
10.1 T8RCM5NBW5K2NNJ BOM ---------- 37

# 1. LCD Specifications

## 1.1 Product Features

| | | |
|---|---|---|
| Monitor | Model | AOC 831S |
| LCD Panel | Driving system | TFT Color LCD |
| | Active Display Area | 470mm（18.5inch） diagpnal<br>409.8mm (W)×230.4mm(H) |
| | Pixel Pitch | 0.3 mm×0.3mm |
| Input | Video | R,G,B Analog Interface，75ohm,0.7V |
| | | |
| | Separate Sync. | H/V TTL |
| | H-Frequency | 30kHz—81kHz |
| | V-Frequency | 56Hz--75Hz |
| Input Connector | | D-Sub 15pin |
| | | |
| Display Colors | | 16.7M Colors |
| Dot Clock | | 85.5MHz |
| Max. Resolution | | 1366 x 768@60Hz |
| Plug & Play | | VESA DDC2B /CI |
| Power Consumption | ON Mode | <25W |
| | Power Saving Mode | <1W |
| | Switch OFF | <0.5W |
| Power Source | | 90~264VAC,47~63Hz, 1.5A Max supply current |
| Environmental Considerations | | Operating Temp: 0° to 40°C<br>Storage Temp.: -20° to 60°C<br>Operating Humidity : 8% to 80% |
| Dimensions(including stand) | | 455.2mm×357.9mm×219.7mm |
| Weight (N. W.): | | 3.63kg |
| Safety | | FCC B CCC IEC950CB etc. |

## 1.2 Factory preset modes

| STANDARD | RESOLUTION | HORIZONTAL FREQUENCY | VERTICAL FREQUENCY |
|---|---|---|---|
| DOS-mode | 640 × 400 | 31.469kHz | 70.087Hz |
| | 720 × 400 | 31.469kHz | 70.087Hz |
| Mac-mode | 832 ×624 | 49.725kHz | 74.55Hz |
| VGA | 640×480 | 31.469kHz | 59.94Hz |
| | 640×480 | 35.00kHz | 66.667Hz |
| | 640×480 | 37.861kHz | 72.80Hz |
| | 640 × 480 | 37.50kHz | 75.00Hz |
| SVGA | 800 × 600 | 35.16kHz | 56.25Hz |
| | 800 × 600 | 37.879kHz | 60.317Hz |
| | 800 × 600 | 48.07kHz | 72.188Hz |
| | 800 × 600 | 46.875kHz | 75Hz |
| XGA | 1024 × 768 | 48.363kHz | 60Hz |
| | 1024 × 768 | 56.476kHz | 70Hz |
| | 1024 × 768 | 57.50kHz | 72.074Hz |
| | 1024 × 768 | 60kHz | 75Hz |
| | 1024 × 768 | 60.241kHz | 74.927Hz |
| | 1360 × 768 | 47.712kHz | 60.015Hz |
| WSXGA | 1366 × 768 | 47.765kHz | 59.85Hz |

# 2. Operation instruction

### Generalization

Press the power button to turn the monitor on or off. The other control buttons are located at front panel of the monitor. By changing these settings, the picture can be adjusted to your personal preferences.

- The power cord should be connected.
- Connect the video cable from the video card of PC to the monitor.
- Press the power button to turn on the monitor, the power indicator will light up.

## 2.1 Control Buttons

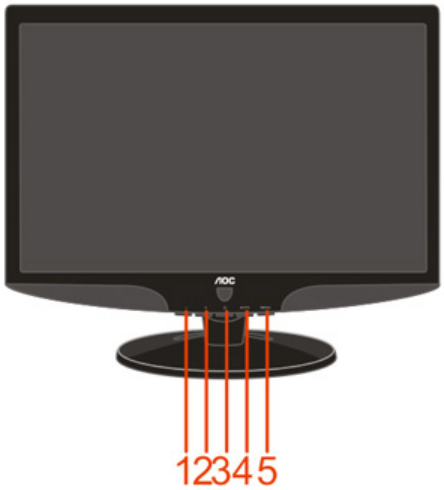


| | Control | Description |
|---|---|---|
| 1 | ECO mode(DCR)/ - | If there is no OSD,select the ECO mode of brightness and DCR.<br>OSD, it will decrease current value of bar, or it will move to last item of menu. |
| 2 | 4:3 or wide/ + | Hotkey, chang 4:3 or wide image ratio . |
| | | OSD, increase current value of bar, or move to next item of menu |
| 3 | Power Button | To turn ON/OFF the moniteor, and power indicator (Green/Blue and Amber/Orange). |
| 4 | Auto / Exit | Hotkey ,it is auto configuration. |
| | | Exit OSD |
| 5 | Menu / Enter | To activate the OSD window, |
| | | Exit current OSD and return to last level. |

## 2.2 OSD User mode adjustment

a) OSD Menu a**djustment steps:**

1.Press MENU button to display OSD main menu of as below, Press Left button or Right button may select other main Menu.
2. Press MENU button to adjust items of each main menu.
3. Press Left button or Right button may select item you wish to enter.
4. Press MENU button to enter, and press Left button or Right button to adjust item you select.
5. Press EXIT button may back previous menu.
6. Repeat steps 2-5 to adjust an additional item, or select the EXIT button to return to previous menu.

## 2.3 OSD Lock Function

Press “menu” and hold,with turn on “Power”, the OSD menu is locked. Again, the OSD menu is non-locked.

For the OSD menu other function ,Please refer to “user manual” .

# 3.Interface description

## 3.1 VGA 15pin Connector

| Pin No. | Description | Pin No. | Description |
|---|---|---|---|
| 1. | Red Input | 9. | +5VDC |
| 2. | Green Input | 10. | Logic GND |
| 3. | Blue Input | 11. | N/A |
| 4. | N/A | 12. | SDA- DDC-Serial Data |
| 5. | Connection detect | 13. | H Sync |
| 6. | Red GND | 14. | V Sync |
| 7. | Green GND | 15. | SCL- DDC-Serial Clock |
| 8. | Blue GND | | |
| VGA Connector layout | | 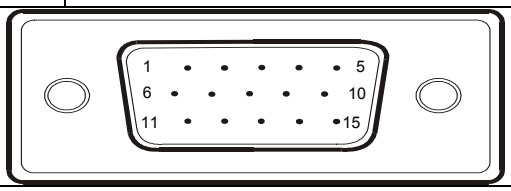 | |

# 4. Panel Feature

The Panel-CLAA185WA03 is a 18.51 inch wide TFT-LCD module with an intergral CCFL Backlght unit and a 30-pin 2ch –LVDS interface . This module supports 1366×768 WXGA+ resolution. and displays up to 16.7 millions colors.The converter module for the Backlight Unit is not built in.

## 4.1 General Specifications

| ITEM | SPECIFICATION |
|---|---|
| Display Area(mm) | 409.8(H)x230.4(V) |
| Number of Pixels | 1366(H)x768(V) |
| Pixel Pitch(mm) | 0.3(H)x0.3 (V) |
| Color Pixel Arrangement | RGB vertical stripe |
| Display Mode | normally white, TN |
| Number of Colors | 16.7M(6 Bit+Hi-FRC) |
| Brightness(cd/m^2) | 250 cd/m$^2$(Typ.) (Center point, Lamp current=7.5 mA) |
| Viewing Angle | 160 / 160 |
| Surface Treatment | Anti-glare, Hard coating(3H) |
| Power consumption(W) | 14.5(typ) |
| Module Size(mm) | 430.37(W)x254.6(H)x16.5(D) |
| Module Weight(g) | 2000(typ) |
| Backlight Unit | CCFL, 2 tables, edge-light(top*1/bottom*1) |

## 4.2 Electrical Absolute Ratings

| ITEM | SYMBOL | MIN. | MAX. | UNIT |
|---|---|---|---|---|
| Power Supply Voltage for LCD | VCC | 0 | 6 | V |
| Lamp Voltage | VL | 715 | 830 | Vrms |
| | | 730 | 890 | |
| Lamp Current | ILO | 3 | 8 | mArms |
| Lamp Frequency | FL | 40 | 80 | kHz |
| static electricity | VESDt | -200 | 200 | V |
| | VESDc | -8000 | 8000 | V |
| Operation Temperature | Top | 0 | 50 | ℃ |
| Storage Temperature | Tstg | -20 | 60 | ℃ |
| Delayed Discharge Time | TD | -- | 1 | sec |

## 4.3 Electrical Characteristics

a) TFT LCD module

| ITEM | | SYMBOL | MIN | TYP | MAX | UNIT |
|---|---|---|---|---|---|---|
| Power Supply Voltage for LCD | | Vcc | 4.5 | 5.0 | 5.5 | V |
| Power Supply Current for LCD | | Icc | - | 700 | 1000 | mA |
| Permissive Input Ripple Voltage | | VRP | - | - | 100 | mVp-p |
| Differential impedance | | Zm | 90 | 100 | 110 | Ω |
| Logic input voltage LVDS:IN+，IN- | Common Mode Voltag | VCM | 1.125 | 1.25 | 1.375 | V |
| | Differential Input Voltage | \|VID\| | 250 | 350 | 450 | mV |
| | Threshold Voltage(High) | VTH | - | - | 100 | mV |
| | Threshold Voltage(Low) | VTL | -100 | - | - | mV |
| LCD Inrush Current | | Inrush | | | 3 | A |
| Power consumption | | P | | 3.5 | 5.5 | W |

b) Backlight unit

| ITEM | SYMBOL | MIN | TYP | MAX | UNIT | REMARK |
|---|---|---|---|---|---|---|
| B/L Voltage | VL | 657 | 730 | 803 | Vrms | Delta , IL=7.5mA Ta=25℃ |
| | | 666 | 740 | 814 | Vrms | STI , IL=7.5mA Ta=25℃ |
| B/L Current | IL | 7 | 7.5 | 8 | mArms | *1) *3) Ta=25℃ |
| B/L operating current | ILO | 3 | 7.5 | 8 | mArms | *1) *3 )Ta=25℃ |
| B/L power consumption | WL | — | 11 | — | W | IL=7.5mA Ta=25℃ |
| Inverter Frequency | FI | 40 | 50 | 60 | kHz | *2) Ta=25℃ |
| Starting Lamp Voltage | VS | — | — | 1700 | Vrms | *9)Ta=0℃ |
| | | — | — | 1400 | Vrms | *9)Ta=25℃ |
| PWM Dimming Ratio | — | 20 | - | 100 | % | *4) |

## 4.4 Optical Specifications

| ITEM | | SYMBOL | CONDITION | min | typ | max | UNIT |
|---|---|---|---|---|---|---|---|
| Contrast Ratio | | CR | θ=ψ= 0° | 800 | 1000 | -- | -- |
| Luminance(CEN) | | L | θ=ψ= 0° | 200 | 250 | -- | cd/m$^2$ |
| 9P Uniformity | | ΔL | θ=ψ= 0° | 75 | -- | -- | % |
| Response Time | | Tr | θ=ψ= 0° | -- | 5 | 8 | ms |
| | | Tf | θ=ψ= 0° | -- | | | ms |
| Crosstalk | | CT | θ=ψ= 0° | 0 | -- | 1 | % |
| Viewing Angle | Horizontal | Ψ(L/R) | CR≧10 | 140 | 160 | -- | *4) |
| | Vertical | θ(U/D) | | 140 | 160 | -- | |
| Color Coordinates | White | X<br>Y | θ=ψ= 0° | 0.283<br>0.299 | 0.313<br>0.329 | 0.343<br>0.359 | *3) |
| | Red | X<br>Y | | 0.620<br>0.305 | 0.650<br>0.335 | 0.680<br>0.365 | |
| | Green | X<br>Y | | 0.252<br>0.586 | 0.282<br>0.616 | 0.312<br>0.646 | |
| | Blue | X<br>Y | | 0.116<br>0.055 | 0.146<br>0.085 | 0.176<br>0.115 | |
| Gamut | | CG | θ=ψ= 0° | 70 | 72 | -- | % |
| Gamma | | γ | VESA | 2.0 | 2.2 | 2.4 | -- |

## 4.5 TFT LCD Module Block Diagram

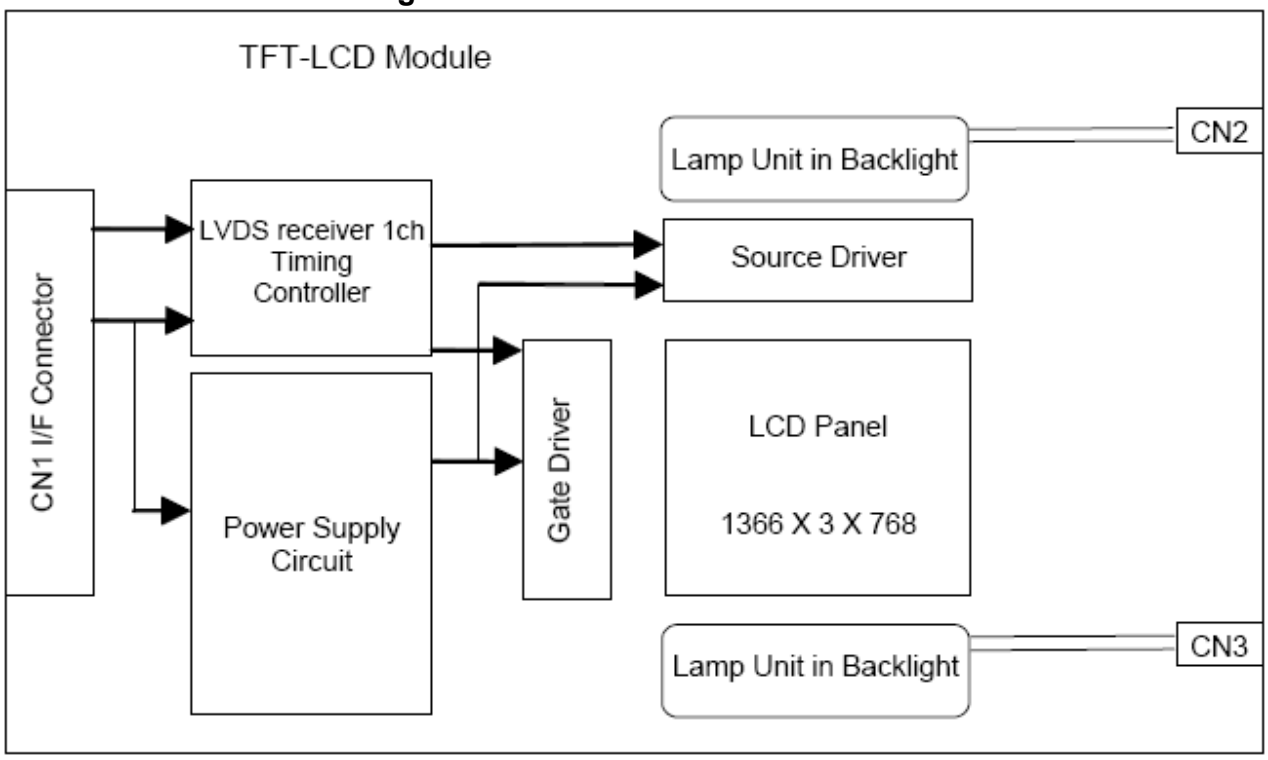

## 4.6 LCD module input terminal pin assignment

Connector:093G30-B2001A(STARCONN)

| PIN NO. | SYMOBL | FUNCTION |
|---|---|---|
| 1 | NC | NC |
| 2 | NC | NC |
| 3 | NC | NC |
| 4 | GND | Power ground |
| 5 | RXIN0- | Negative LVDS differential data input(0) |
| 6 | RXIN0+ | Positive LVDS differential data input(0) |
| 7 | GND | Power ground |
| 8 | RXIN1- | Negative LVDS differential data input(1) |
| 9 | RXIN1+ | Positive LVDS differential data input(1) |
| 10 | GND | Power ground |
| 11 | RXIN2- | Negative LVDS differential data input(2) |
| 12 | RXIN2+ | Positive LVDS differential data input(2) |
| 13 | GND | Power ground |
| 14 | RXCLKIN- | Negative LVDS differential clock input(clock) |
| 15 | RXCLKIN+ | Positive LVDS differential clock input(clock) |
| 16 | GND | Power ground |
| 17 | RXIN3- | Negative LVDS differential data input(3) |
| 18 | RXIN3+ | Positive LVDS differential data input(3) |
| 19 | GND | Power ground |
| 20 | NC | NC |
| 21 | NC | NC |
| 22 | NC | NC |
| 23 | GND | Power ground |
| 24 | GND | Power ground |
| 25 | GND | Power ground |
| 26 | VCC | Power supply input voltage(5.0 V) |
| 27 | VCC | Power supply input voltage(5.0 V) |
| 28 | VCC | Power supply input voltage(5.0 V) |
| 29 | VCC | Power supply input voltage(5.0 V) |
| 30 | VCC | Power supply input voltage(5.0 V) |

# 5.Block Diagram

## 5.1 LCD Block Diagram

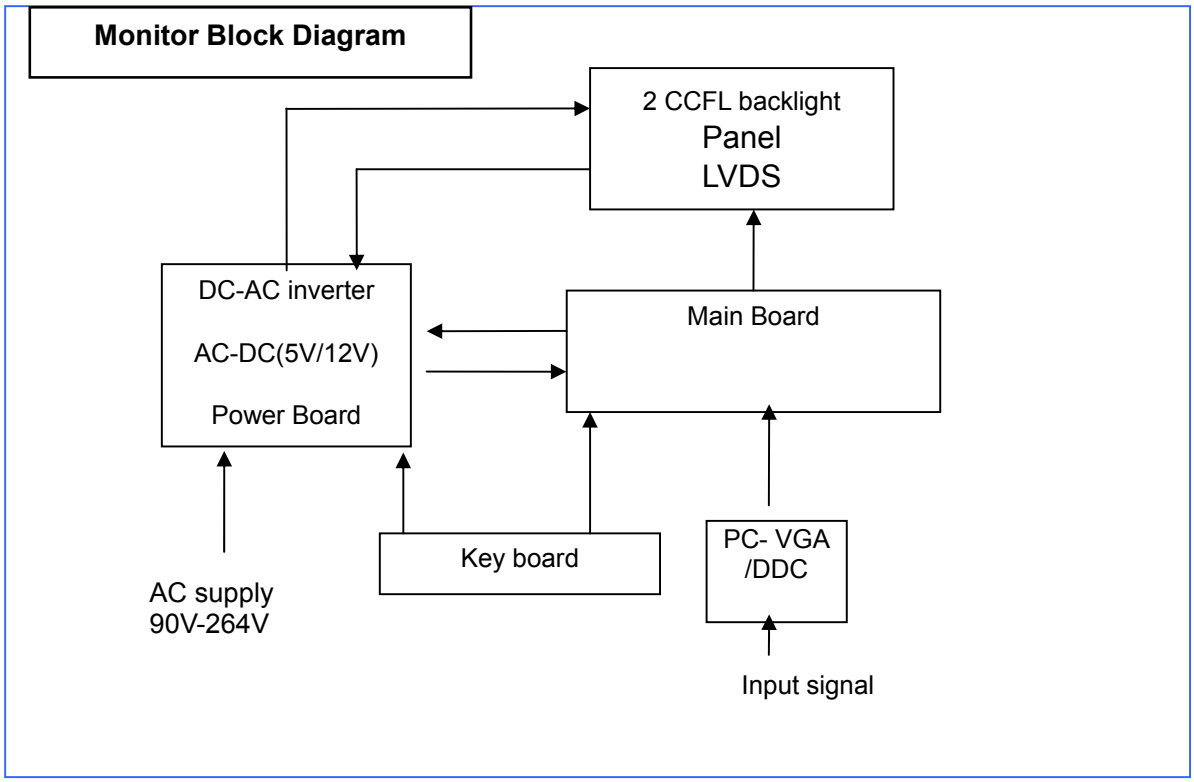


## 5.2 MainBoard Block Diagram---715G2904

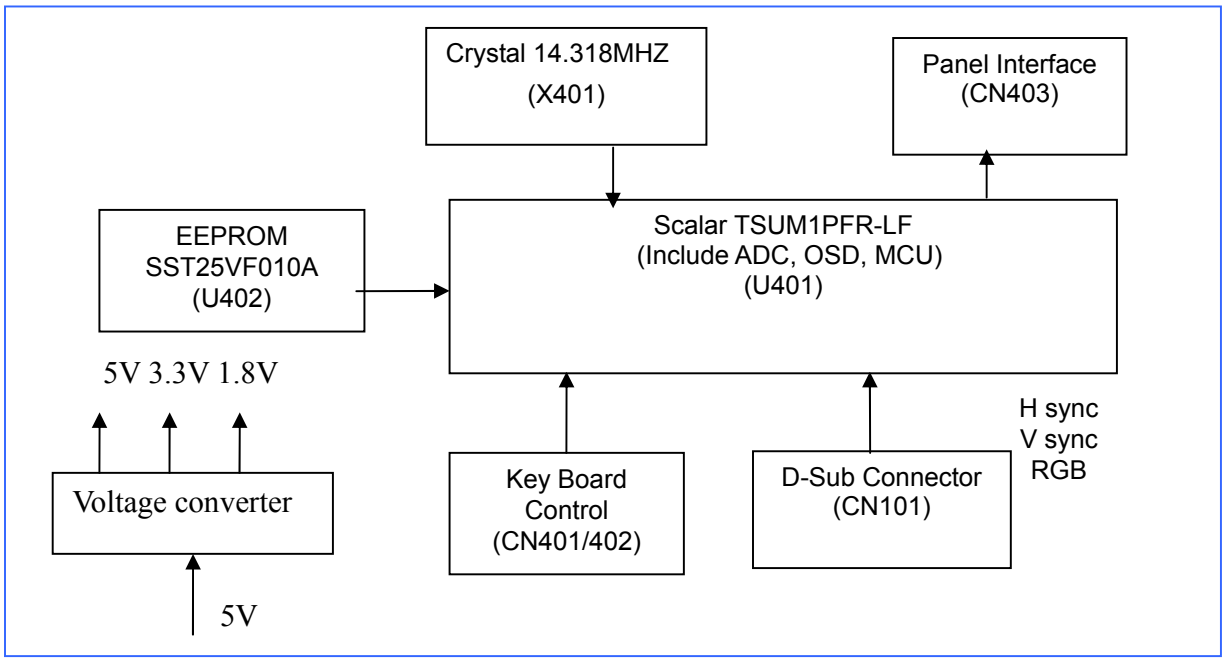

## 5.3 Power Board Block Diagram

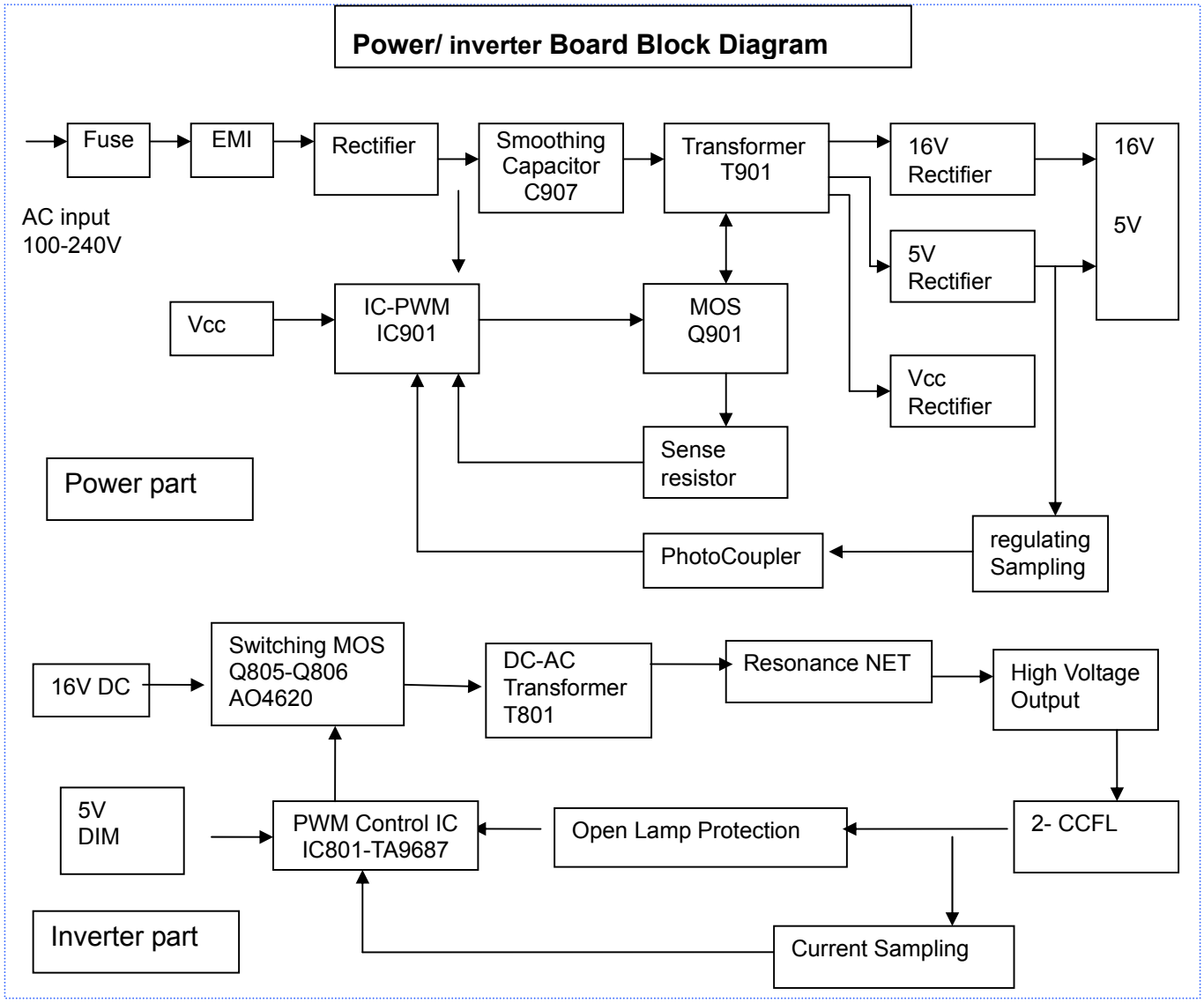

## 5.4 Software Flow Chart

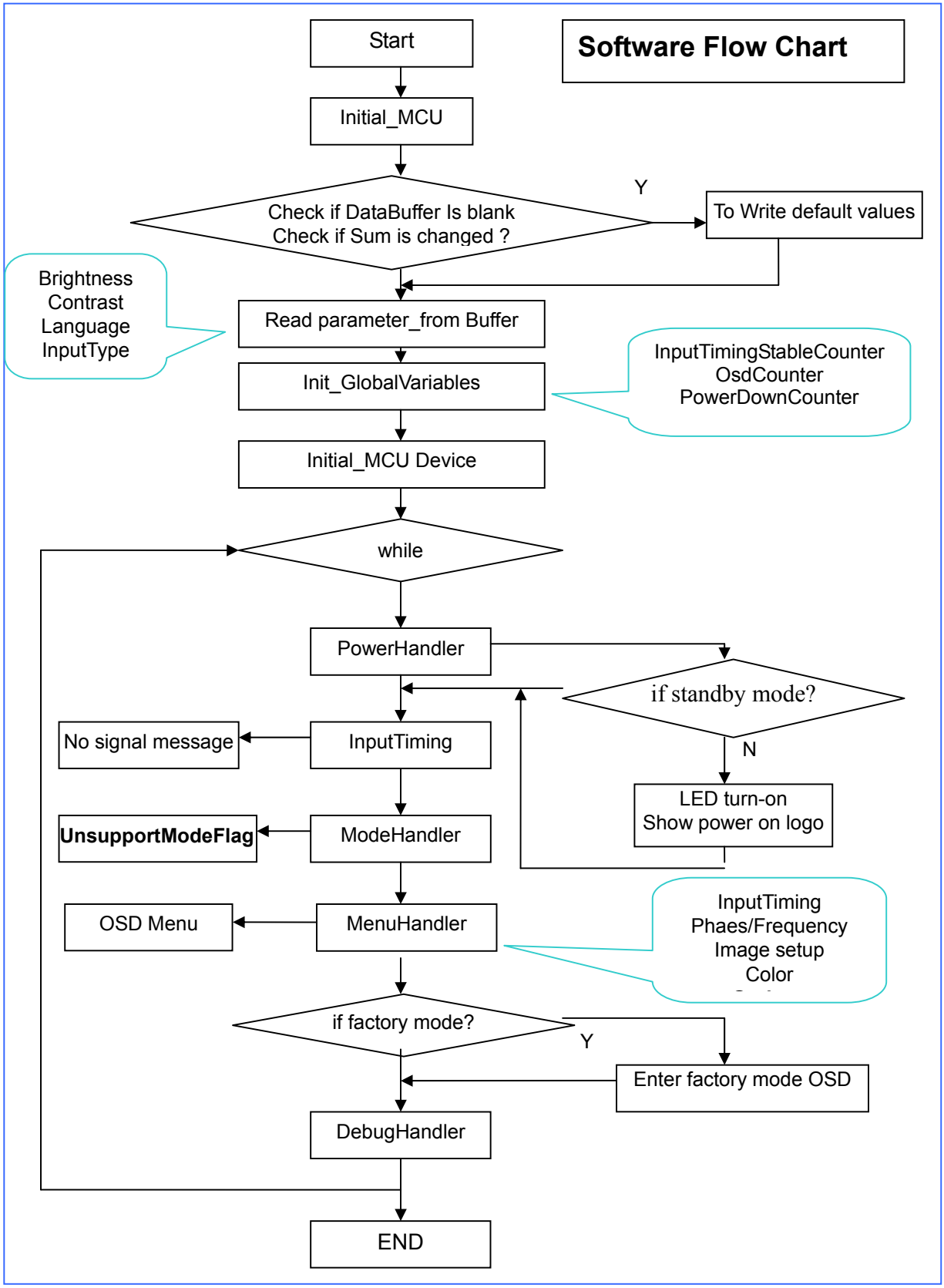

# 6. Circuit Schematic

## 6.1 Main Board 1---715G2904-2-2

Input part---VGA+DDC

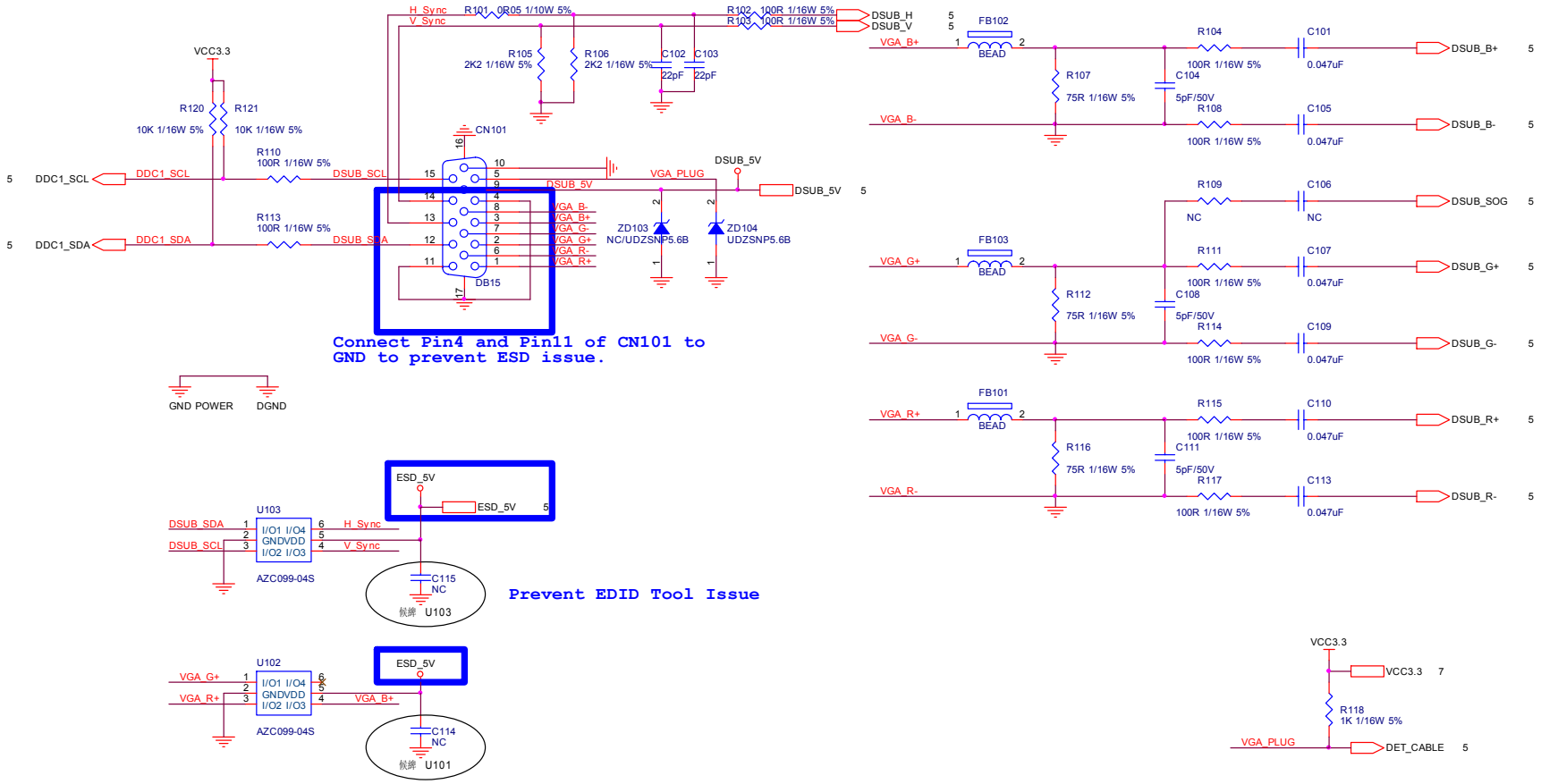


| | | | | | |
|---|---|---|---|---|---|
| T P V ( Top Victory Electronics Co., Ltd. ) | | OEM MODEL | IO A191 | Size | B |
| 結 隔 瓜 鋼 腹 | G2904-2-2-IO-1-090120 | TPV MODEL | CBPCRM5D1Q1J | Rev | -2-2 |
| Key Component | 02.Input | PCB NAME | 715G2904-2-2 | 称爹 | <称爹> |
| Date | Tuesday, January 20, 2009 | Sheet | 4 of 7 | | |

# Power part---5V+3.3V+1.8V+Vlcd

2008/01/14
BAT99 : If 0.05A,VF=1.0V
BAV70 : If 0.05A,VF=1.0V
It's need to use Low Dropout Regulator.

Due to LG doen't request PC'99 Function.

| | D401 | R458 |
|---|---|---|
| LG | NC | 0Ohm 1/16W |
| OTHER | BAV99 | NC |

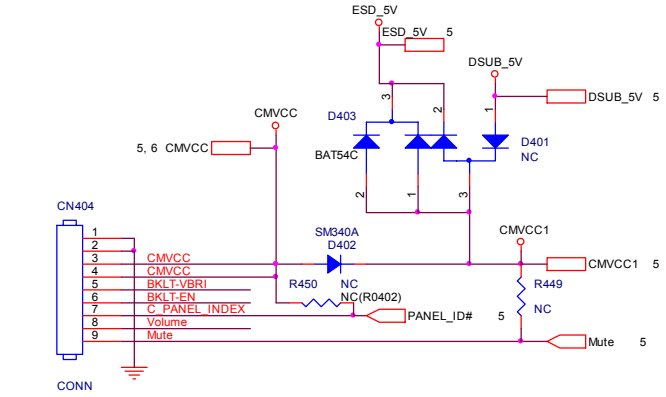


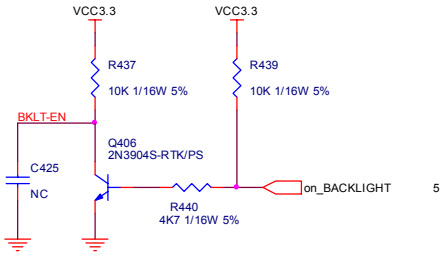


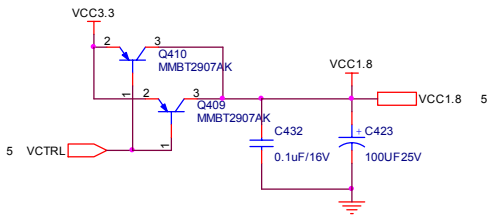


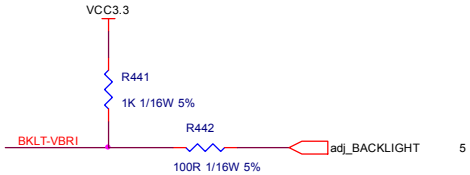


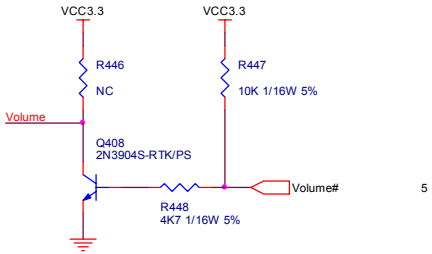


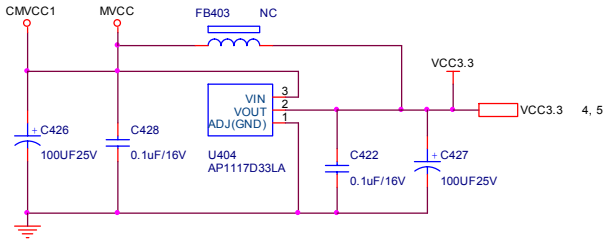


U404 can use package 232 or 252.

| | | | | | |
|---|---|---|---|---|---|
| T P V ( Top Victory Electronics Co., Ltd. ) | | OEM MODEL | IO A19 | Size | B |
| 話 隔 瓜 鋼 腹 | G2904-2-2-IO-1-090120 | TPV MODEL | CBPCRM5D1Q1J | Rev | -2-2 |
| Key Component | 05.Power | PCB NAME | 715G2904-2-2 | 称爹 | <称爹> |
| Date | Tuesday, January 20, 2009 | Sheet | 7 of 7 | | |

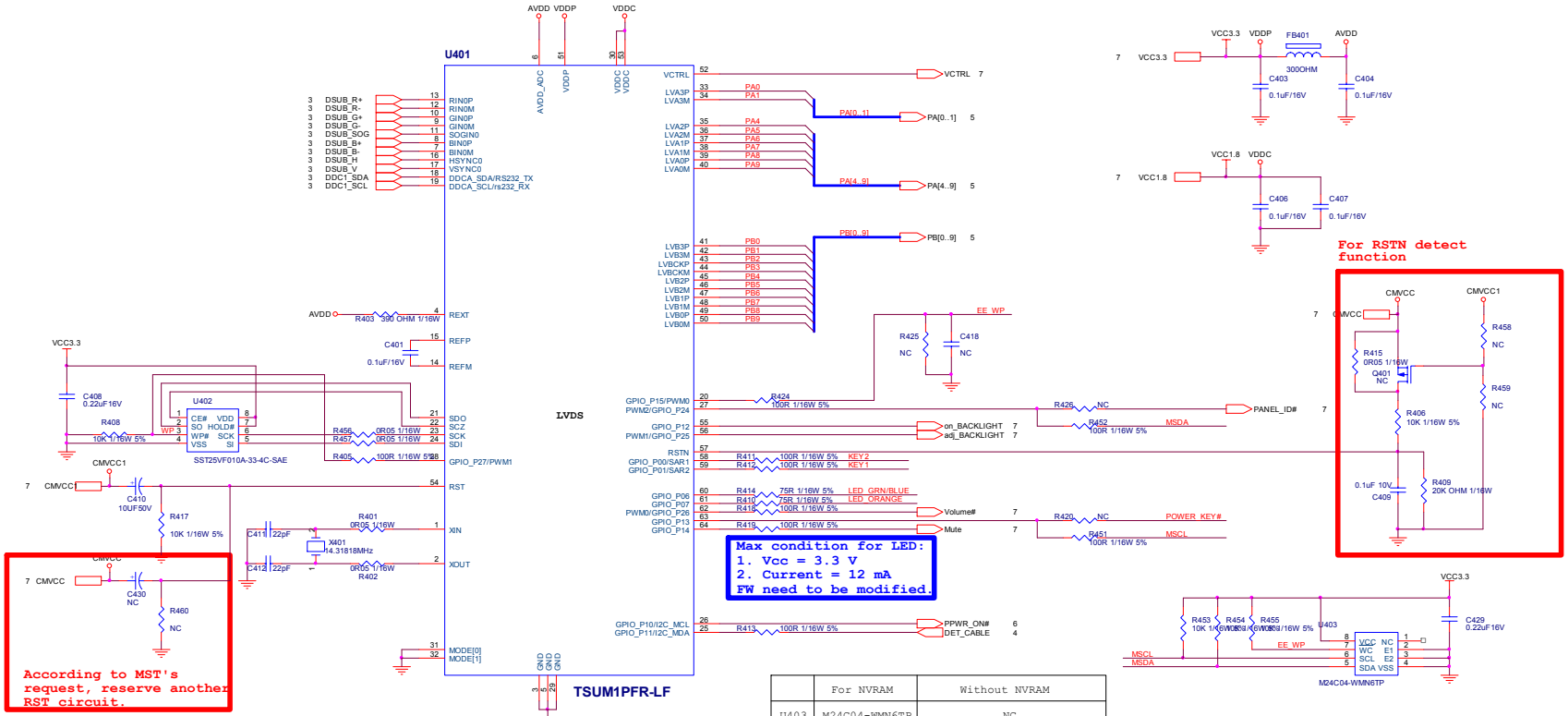


| | U402 |
|---|---|
| SST | For user data, WB, EDID, HDCP are saved in Flash. |

| | U402 |
|---|---|
| 010A | Befor AOC ID2007 OSD |
| 020A | For ID2008 |

X'TAL
Normal Function : CL = Cs + ((Cg*Cd)/(Cg+Cd))
P.S : Assume Cs = 4 pF

| X401 | CL of SPEC | Cs and Cd (C411, C412) |
|---|---|---|
| 鸿 (93G 22-53B-H) | 18 pF | 27 pF |
| 瑨红 (93G 22-53-J) | 32 pF | 56 pF |

| | For NVRAM | Without NVRAM |
|---|---|---|
| U403 | M24C04-WMN6TP | NC |
| C419 | 0.22uF16V | NC |
| R424 | 100R 1/16W 5% | NC |
| R451 | 100R 1/16W 5% | NC |
| R452 | 100R 1/16W 5% | NC |
| R453 | 10K 1/16W 5% | NC |
| R454 | 10K 1/16W 5% | NC |
| R455 | 10K 1/16W 5% | NC |
| R426 | NC | NC or 100R 1/16W 5% |
| R420 | NC | NC or 100R 1/16W 5% |

When NVRAM is used, POWER_KEY# and PANEL_ID# will not be used at same time.

R425, C418 depend on case.

PANEL_ID# and POWER_KEY# could be optional.

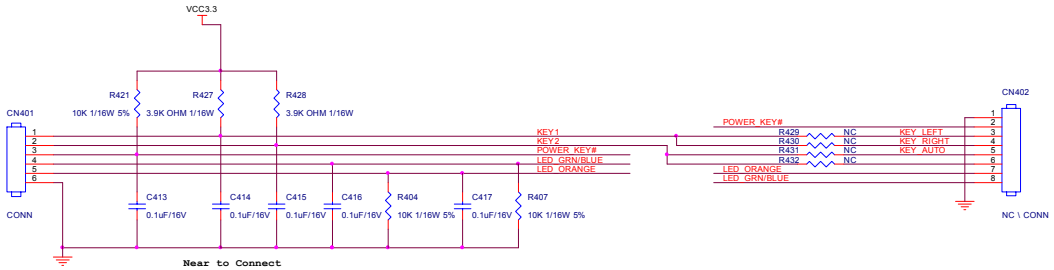


| | | | | | |
|---|---|---|---|---|---|
| T P V (Top Victory Electronics Co., Ltd.) | | OEM MODEL | IO A191 | Size | C |
| 适 [illegible] | G2904-2-2-IO-1-090120 | TPV MODEL | CBPCRM5D1Q1J | Rev | 1E-2 |
| Key Component | 03.Scalar | PCB NAME | 715G2904-2-2 | [illegible] | <[illegible]> |
| Date | Tuesday, January 20, 2009 | Sheet | 5 of 7 | | |

**CN403 change to 14P Dip connector based on 715G2904-D**

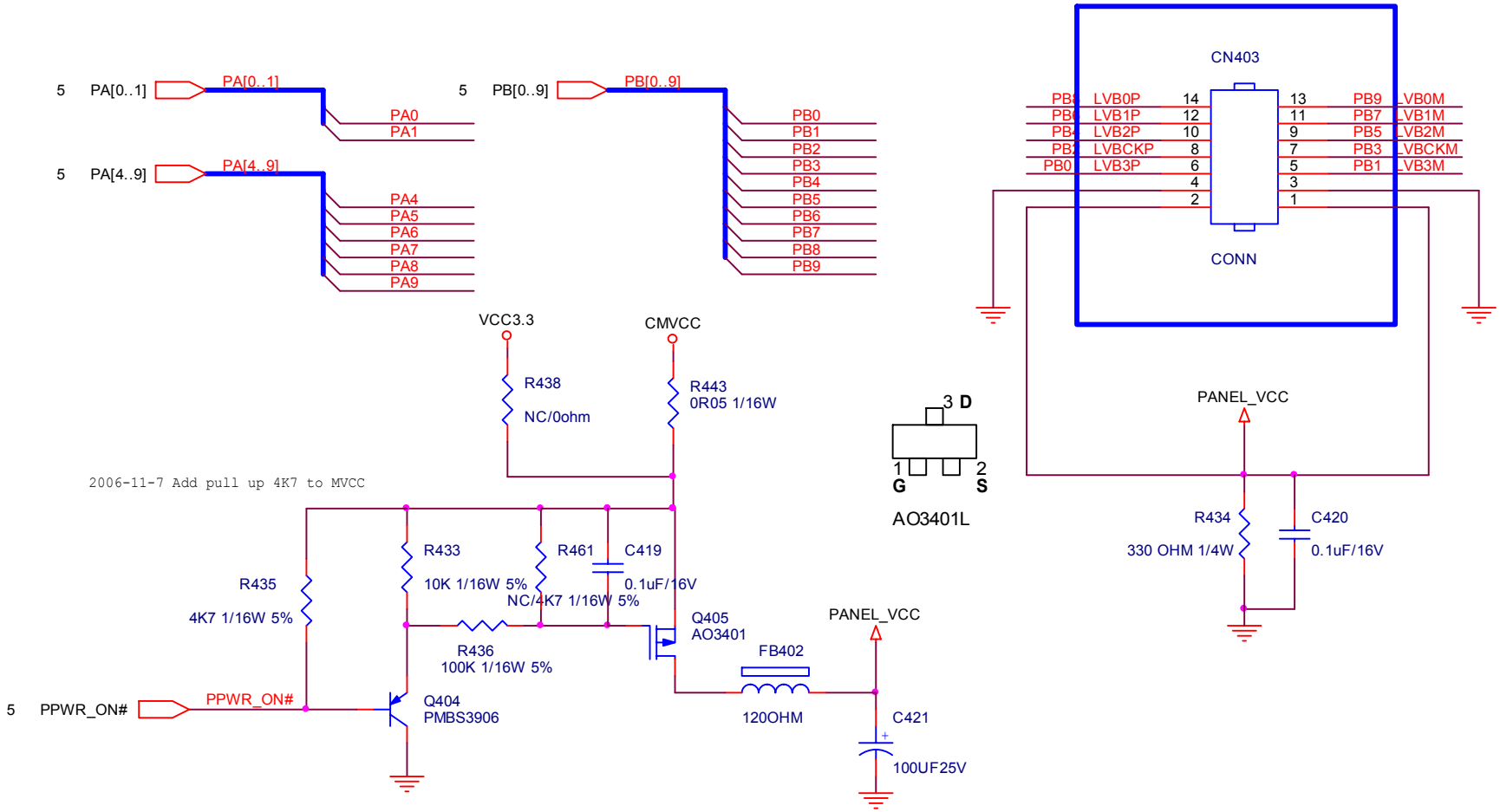


| | | | | | |
|---|---|---|---|---|---|
| T P V ( Top Victory Electronics Co., Ltd. ) | | OEM MODEL | A191E I-O DATA 18.5 | Size | A |
| 結 隔 瓜 綱 腹 | G2904-2-2-IO-1-090120 | TPV MODEL | CBPCRM5D1Q1J | Rev | -2-2 |
| Key Component | 04.Output | PCB NAME | 715G2904-2-2 | 称爹 | <称爹> |
| Date | Tuesday, January 20, 2009 | Sheet | 6 of 7 | | |

## 6.2 Power Board

715G2852-3-4---adapter 12V/5V

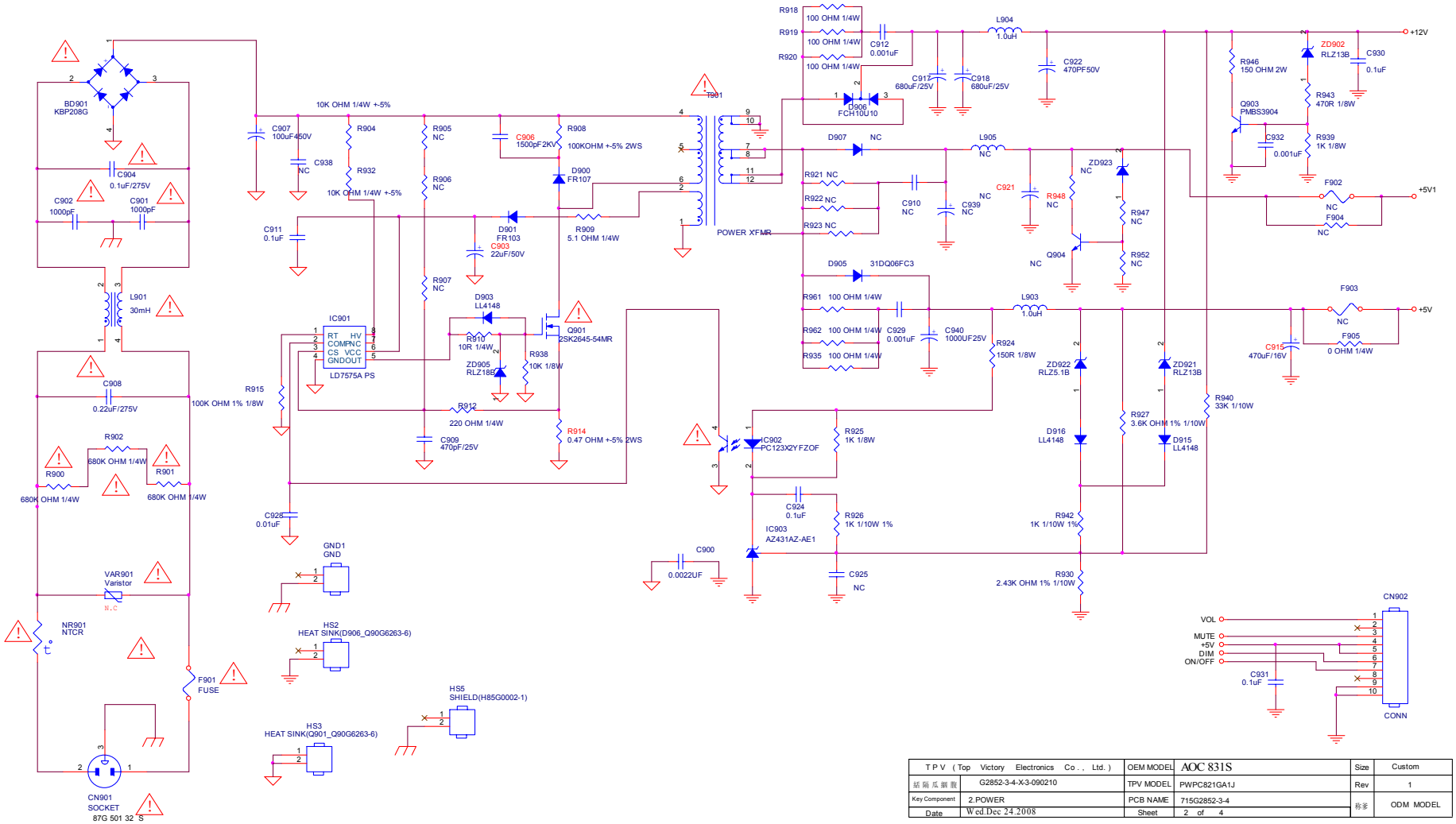


| | | | | | |
|---|---|---|---|---|---|
| T P V ( Top Victory Electronics Co., Ltd. ) | | OEM MODEL | AOC 831S | Size | Custom |
| 話隔瓜網腹 | G2852-3-4-X-3-090210 | TPV MODEL | PWPC821GA1J | Rev | 1 |
| Key Component | 2.POWER | PCB NAME | 715G2852-3-4 | 称爹 | ODM MODEL |
| Date | Wed.Dec 24.2008 | Sheet | 2 of 4 | | |

## 6.3 Inverter part----

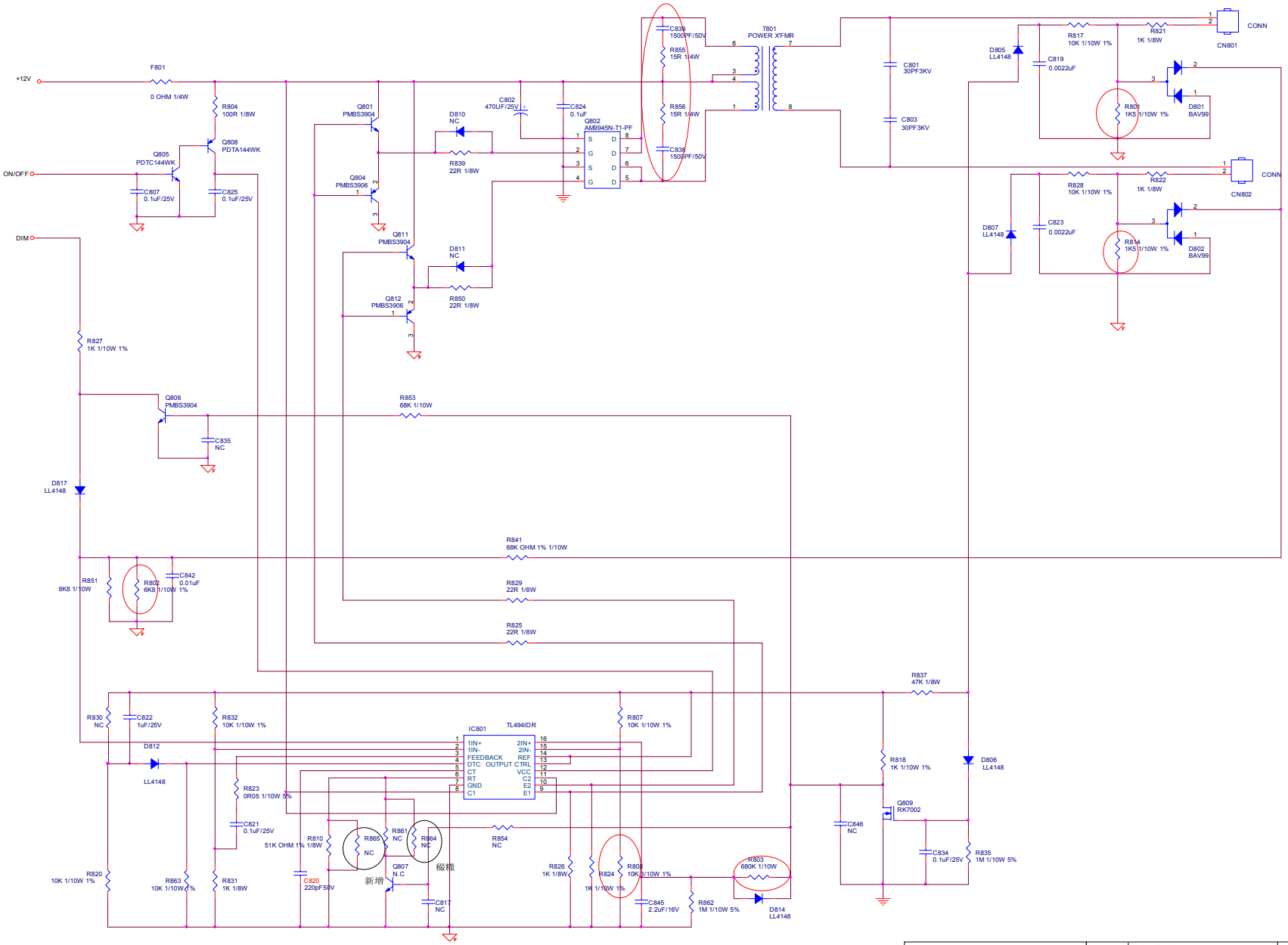


| | | | | | |
|---|---|---|---|---|---|
| T P V ( Top Victory Electronics Co., Ltd.) | | OEM MODEL | AOC 831S | Size | Custom |
| 結構代號 | G2852-3-4-X-3-090210 | TPV MODEL | PWPC821GA1J | Rev | 1 |
| Key Component | 3.INVERTER | PCB NAME | 715G2852-3-4 | 標準 | ODM MODEL |
| Date | Wed.Dec 24.2008 | Sheet | 3 of 4 | | |

## 6.4 Key Board 715G2991

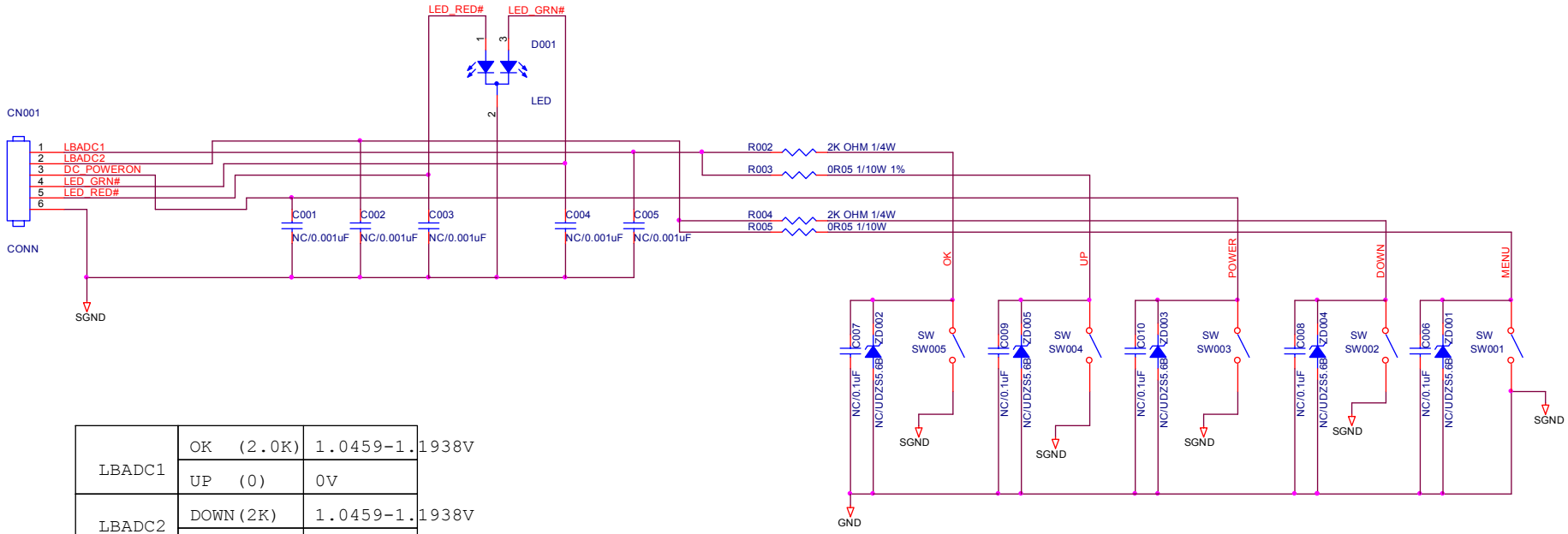


| | | |
|---|---|---|
| LBADC1 | OK (2.0K) | 1.0459-1.1938V |
| | UP (0) | 0V |
| LBADC2 | DOWN(2K) | 1.0459-1.1938V |
| | MENU(1K) | 0.6284-0.7217V |

# 7.Exploded Views

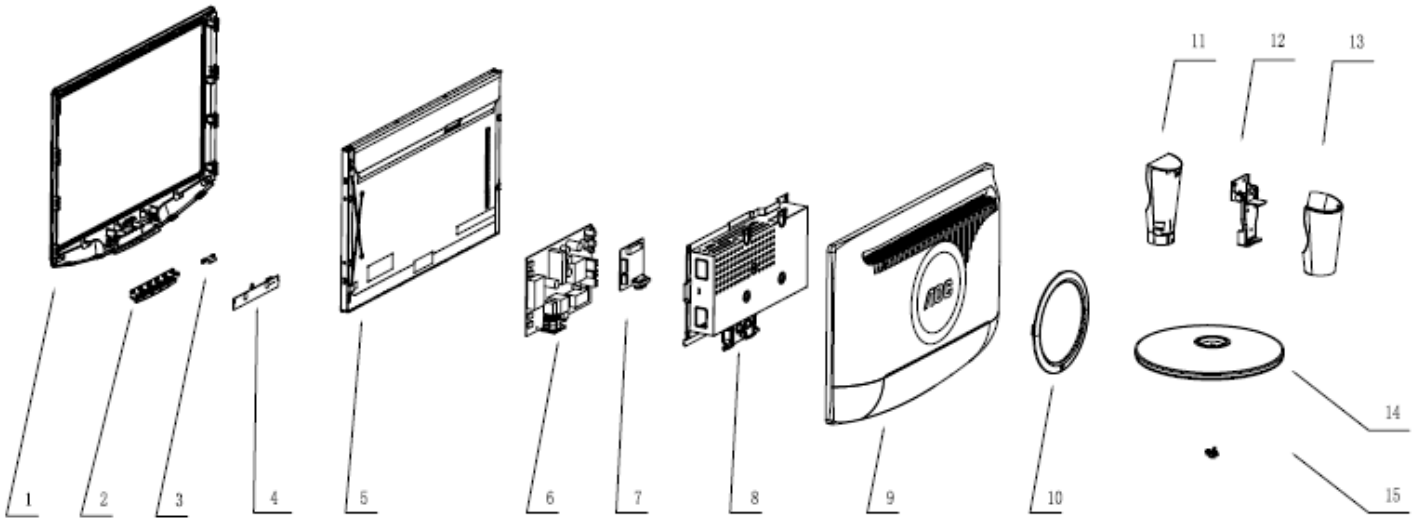


FIRST USED ON: 19" LCD
PART No.: 931
REVISION
VERSION A Oct.-29-09
RELEASED FOR PRODUCTION
HB. DU

| | | | | | |
|---|---|---|---|---|---|
| 1 | BEZEL | Q34G0452-* | 14 | BASE | Q34G0360-* |
| 2 | KEY PAD | Q33G0188-* | 15 | SCREW | Q01G8022-2 |
| 3 | LENS | Q33G0189-* | 16 | | |
| 4 | KEY BOARD | | 17 | | |
| 5 | PANEL | | 18 | | |
| 6 | POWER BOARD | | 19 | | |
| 7 | MAIN BOARD | | 20 | | |
| 8 | MAINFRAME | H15G0023-* | 21 | | |
| 9 | REAR COVER | Q34G0453-* | 22 | | |
| 10 | LOGO LOOP | Q34G0358-* | 23 | | |
| 11 | STAND | Q34G0454-* | 24 | | |
| 12 | HINGE | Q37G0101-011 | 25 | | |
| 13 | STAND COVER | Q34G0455-* | 26 | | |

TPV DISPLAY TECHNOLOGY(WUHAN)CO.,LTD
TEL:027-68843840
FAX:027-68849906

| | | | | | |
|---|---|---|---|---|---|
| DRAWN BY: HB. DU | FINISH: | COLOR: | UNIT: MM | SCALE: 1/1 | |
| CHECKED BY: | MATERIAL: | WALL THICKNESS: | | DATE: Oct.-29-09 | |
| APPROVED BY: | PART NAME: | PART NO. | | VERSION: A | |

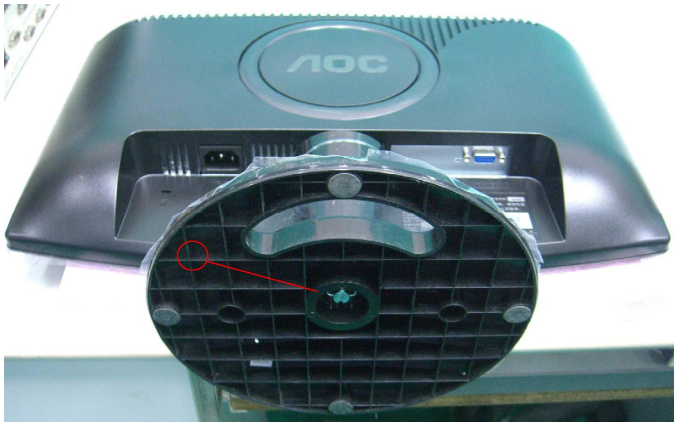

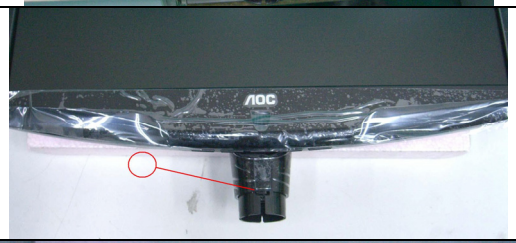

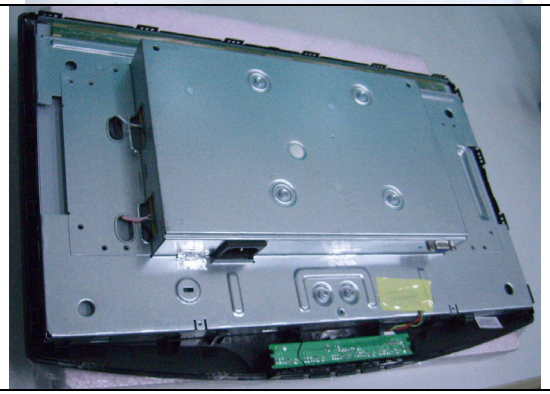
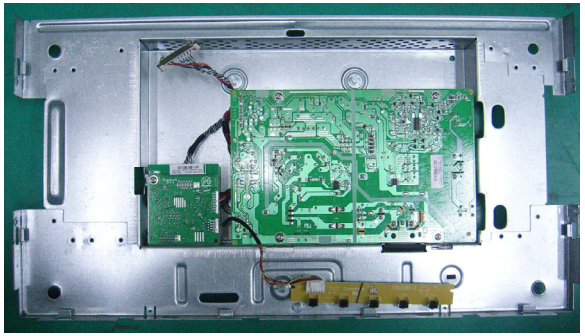
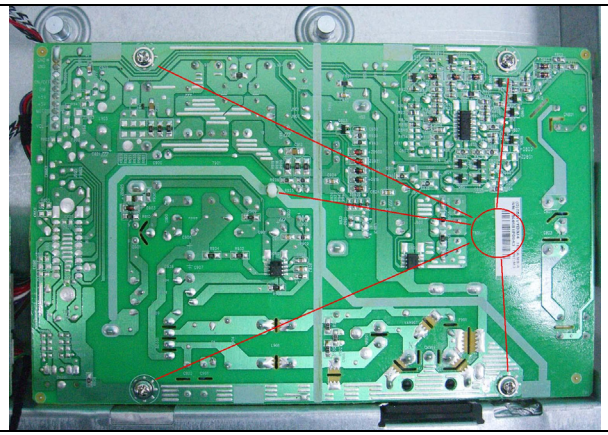
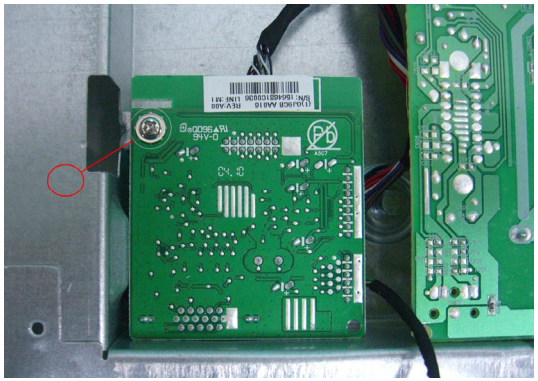

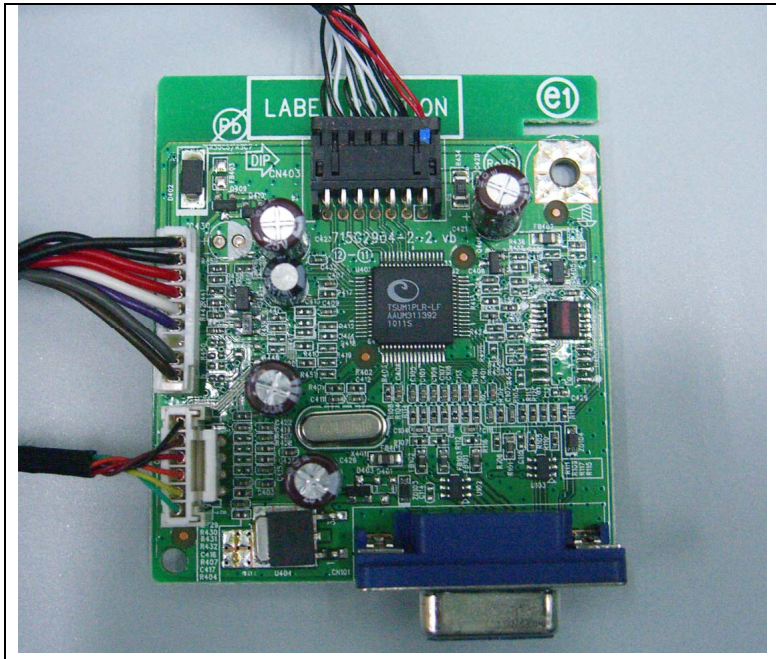

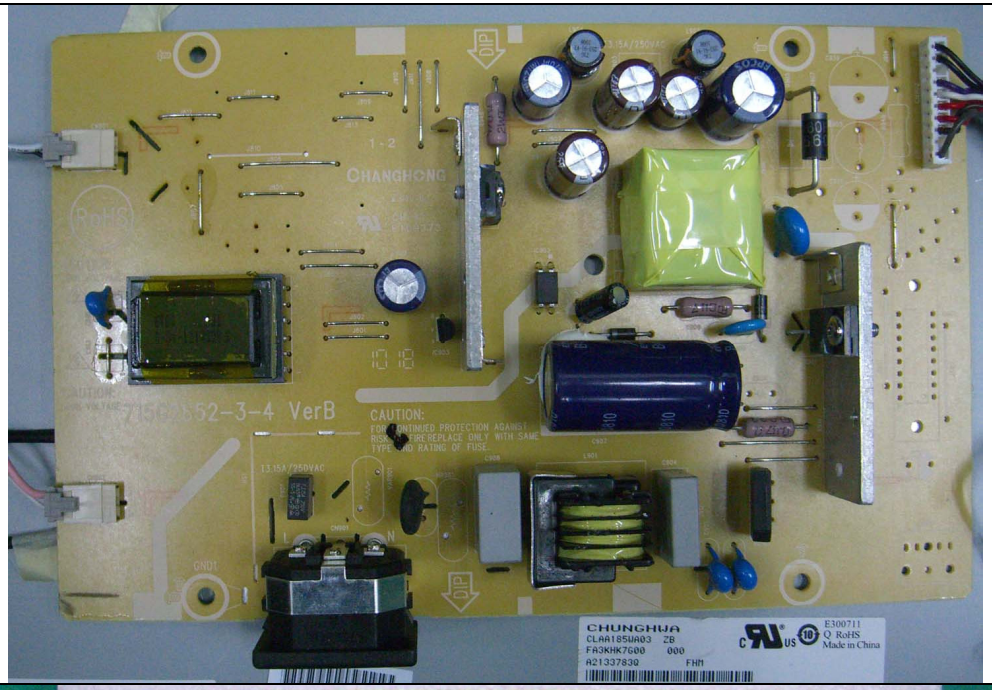
CHANGHONG
CHUNGHUA
Made in China

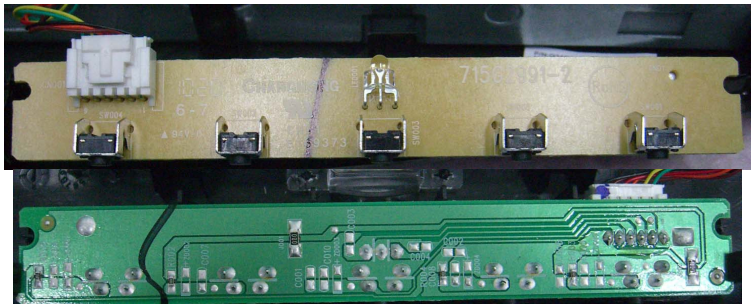

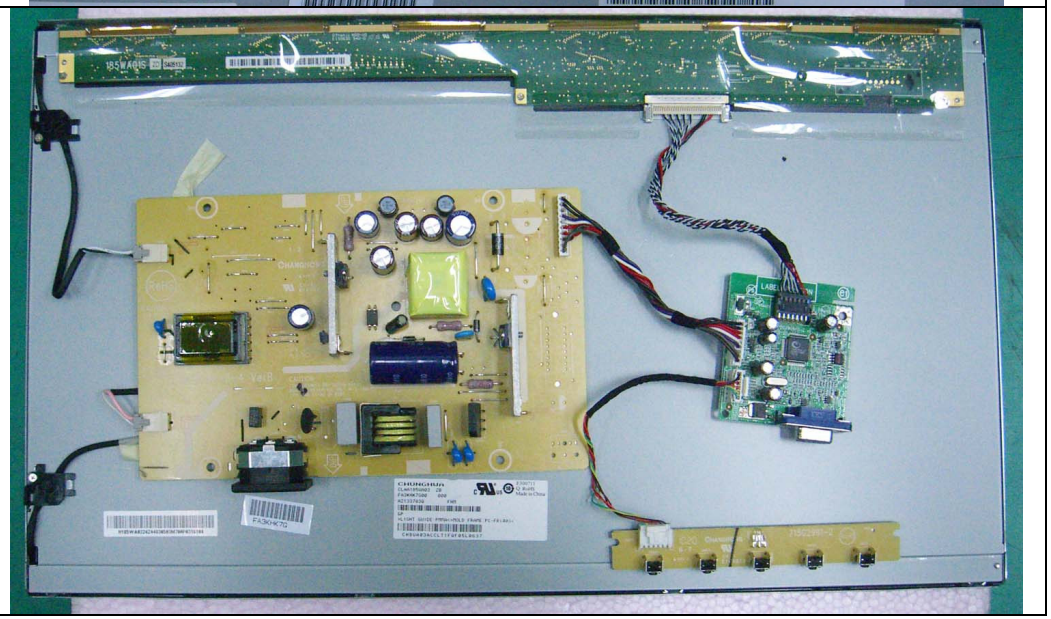

# 8. PCB Layout

## 8.1 MainBoard 1- 715G2904-2-2

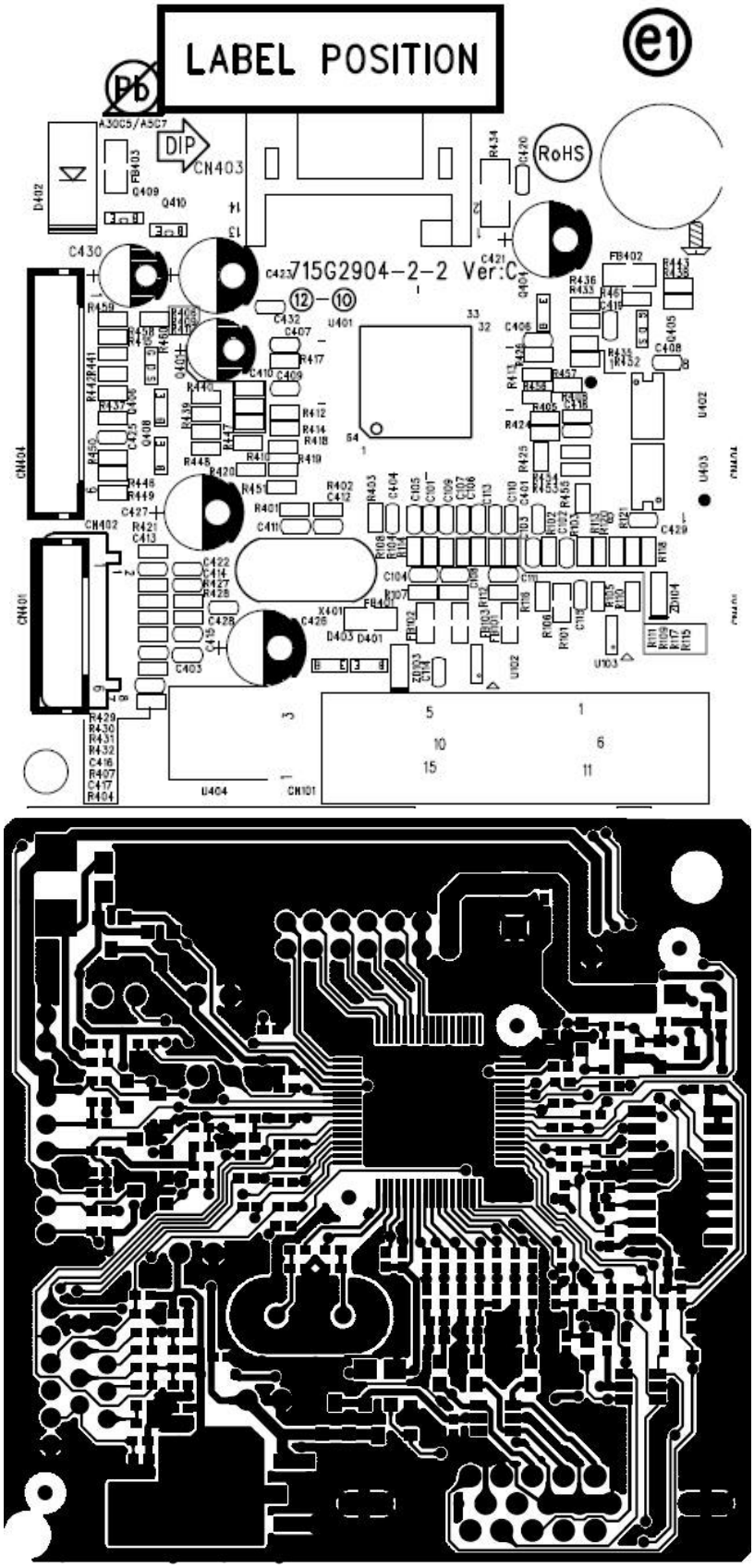

## 8.2 PowerBoard 715G2852-3-4

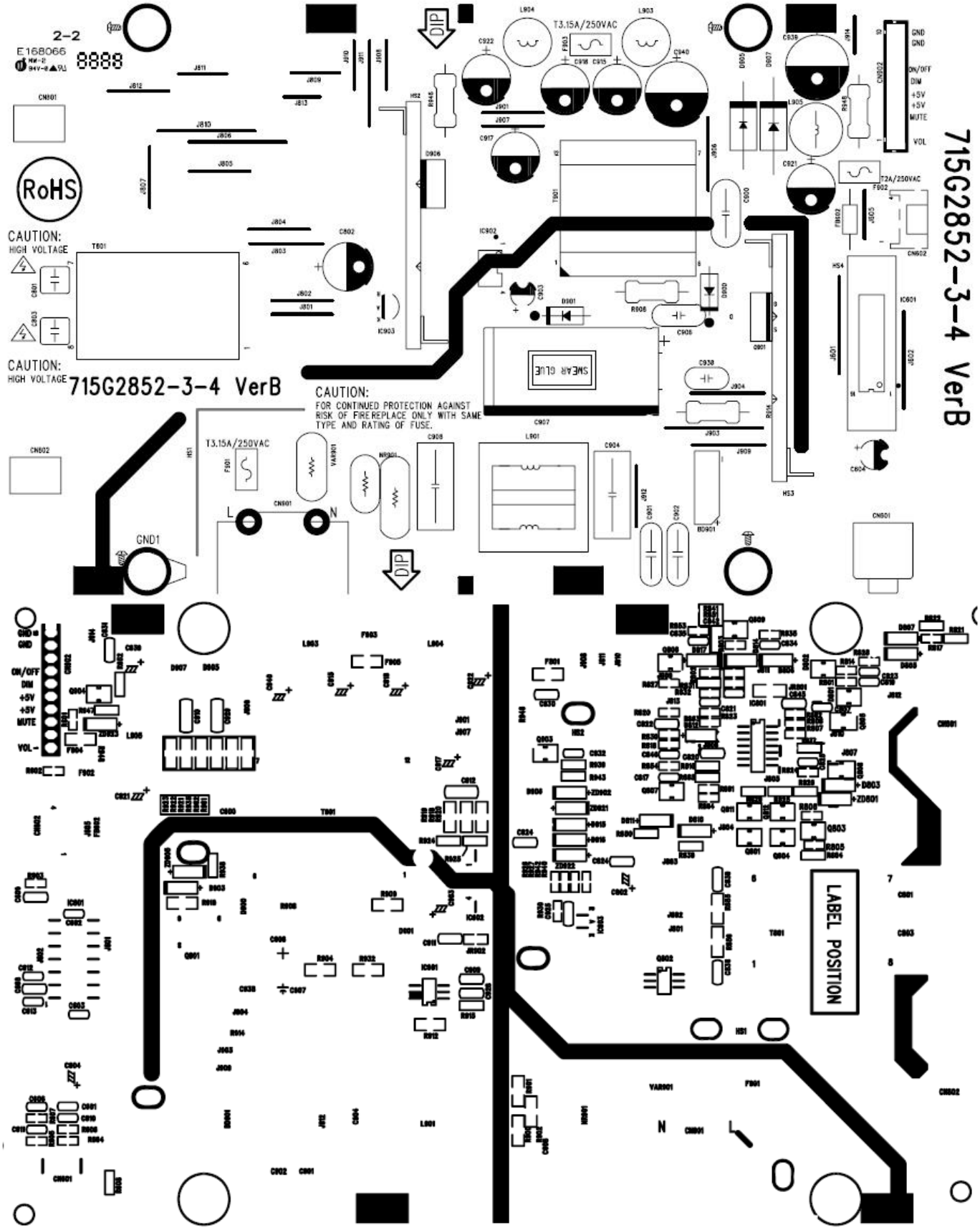

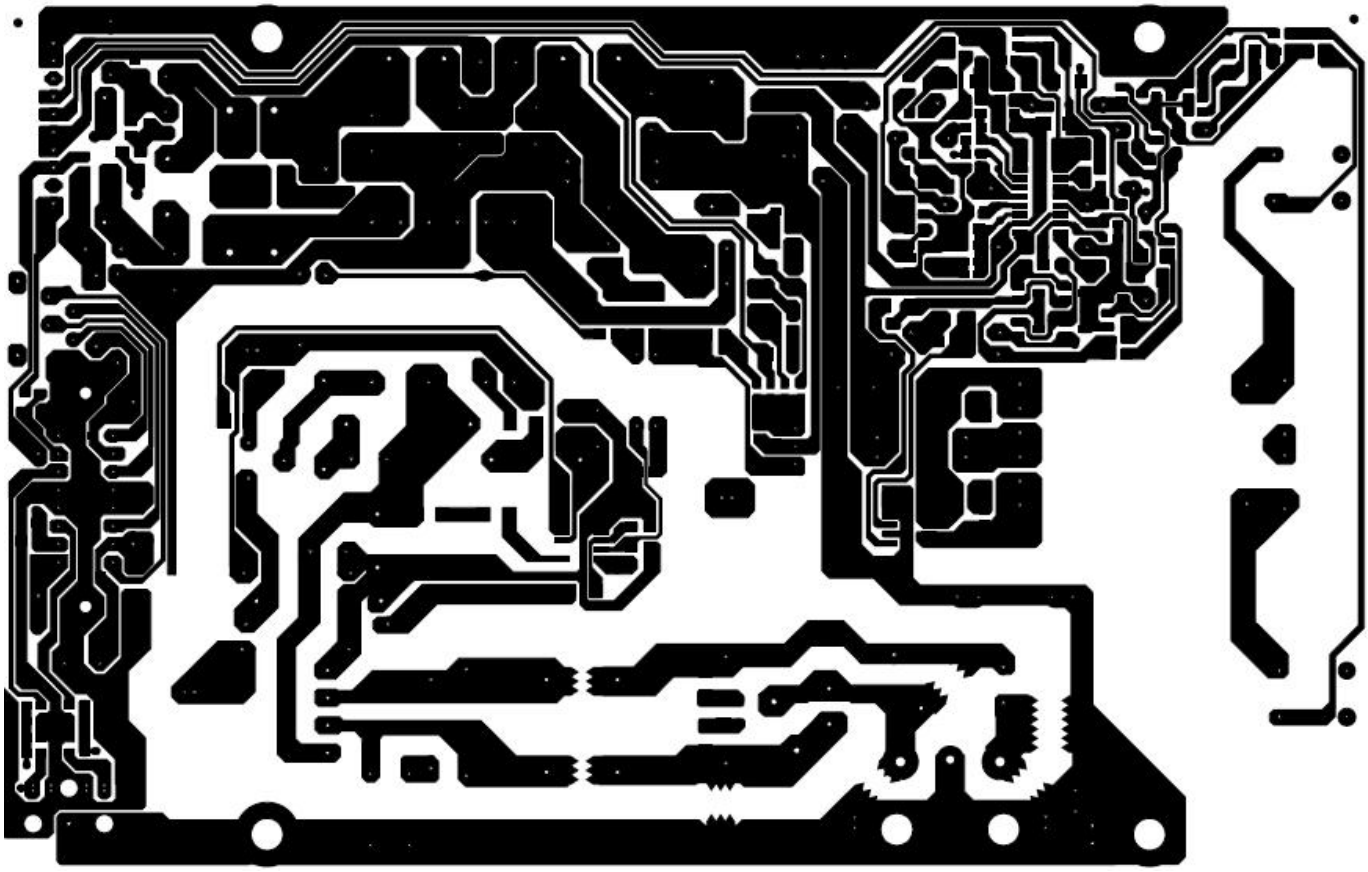

## 8.3 KeyBoard ---715G2991

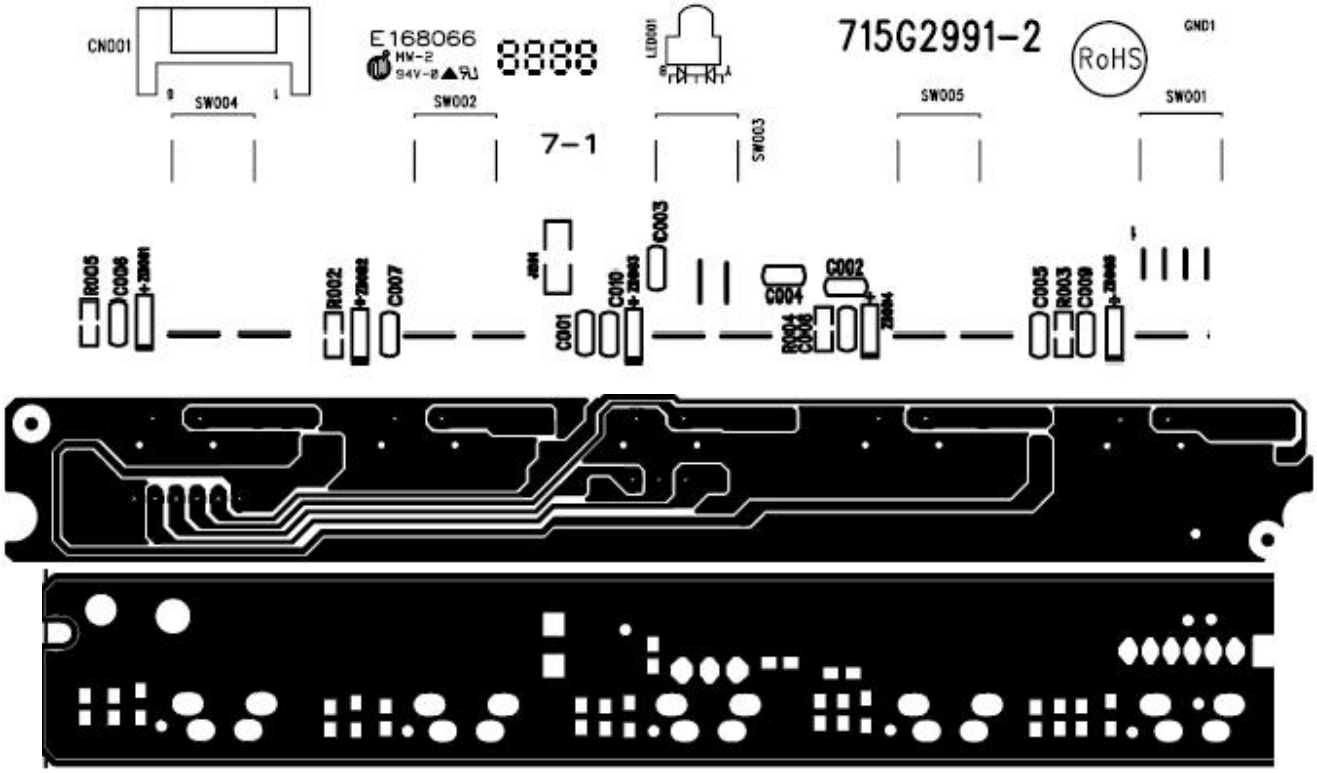

# 9. Maintenance Trouble treatment

## 9.1 Maintainability Requirement

1. Voltmeter. & digital multimeter
2. Oscilloscope.
3. Pattern Generator.
4. DDC Tool with Compatible Computer.
5. Alignment Tool.
6. LCD Color Analyzer.
7. Service Manual.
8. User Manual.
9. repair tools etc

## 9.2 Trouble Shooting

Main Board---No Power

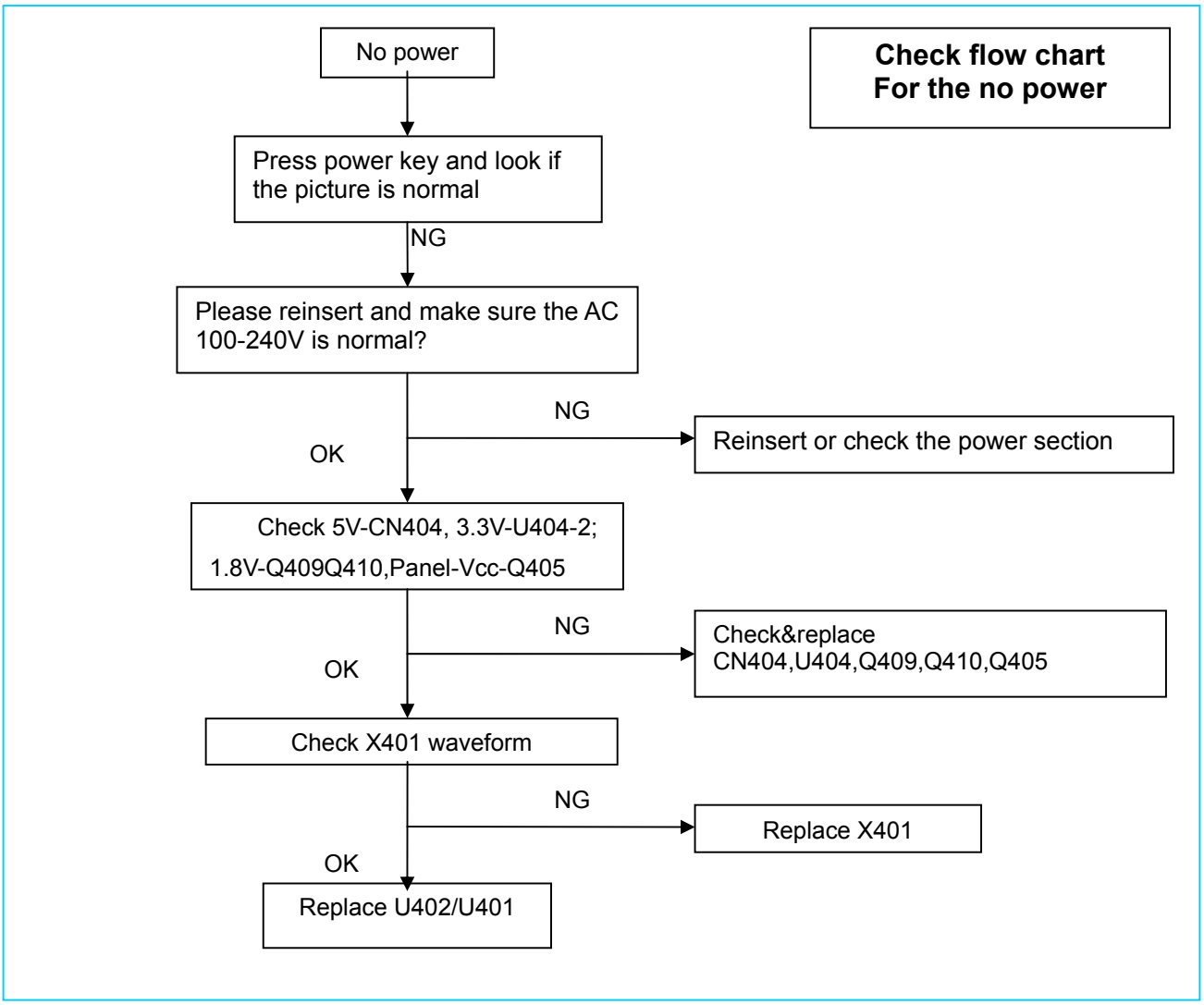

**No picture (LED orange)**

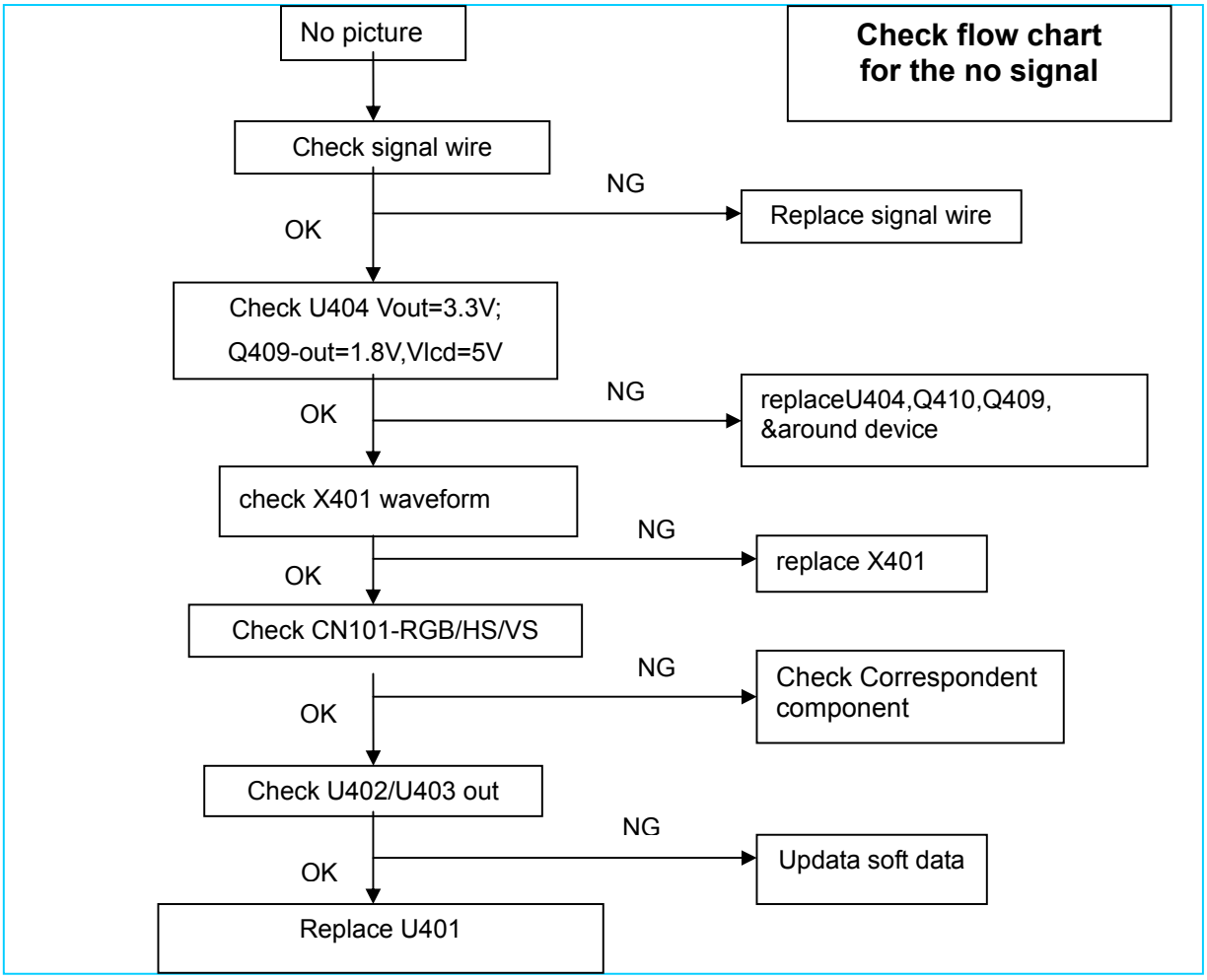


**Whitescreen**

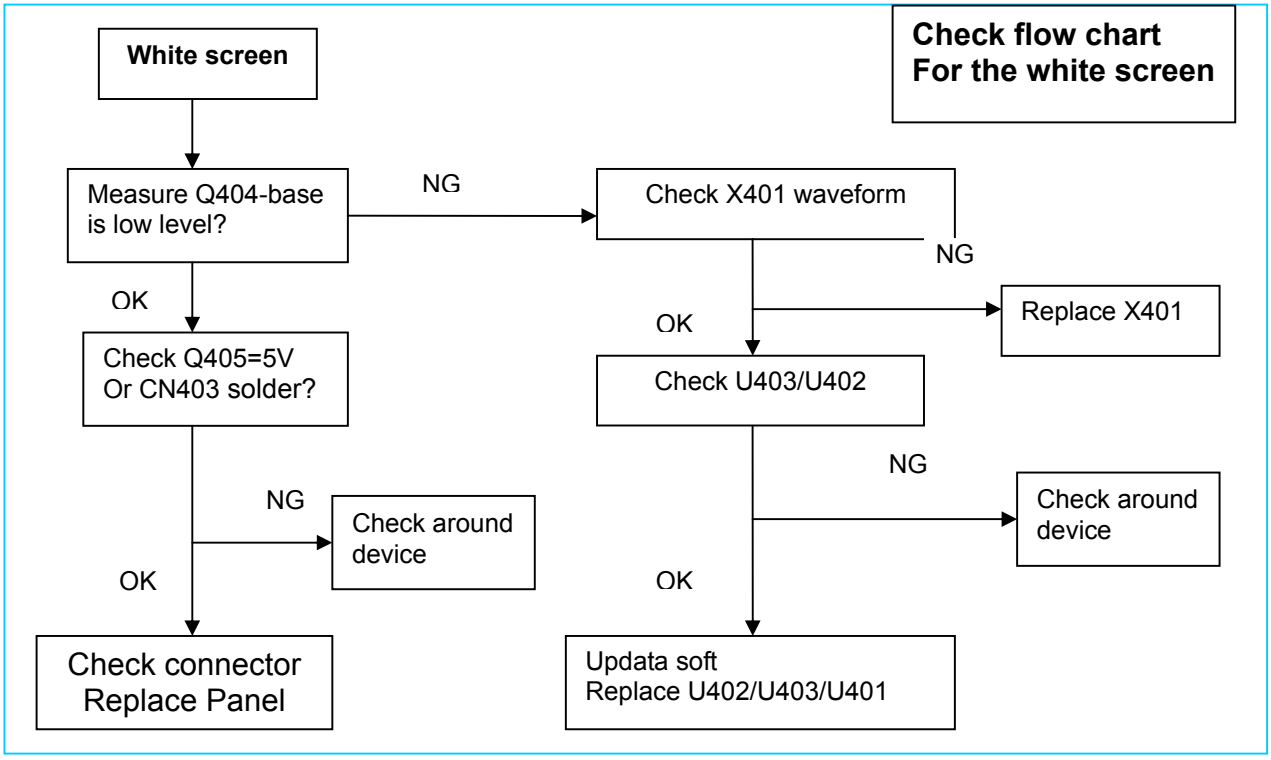

**Power Board---**

**No Power 5V/12V**

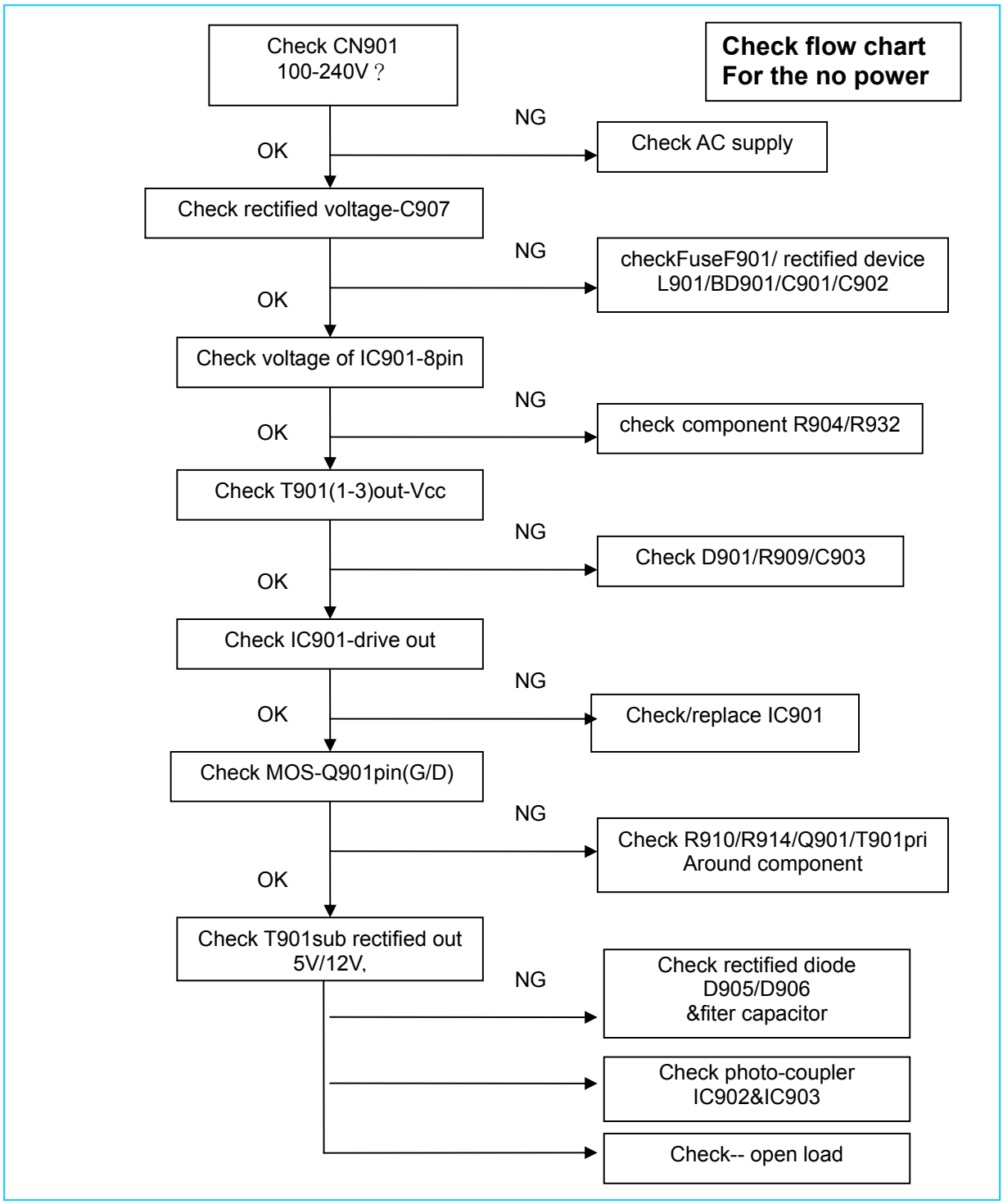

## No Backlight of panel

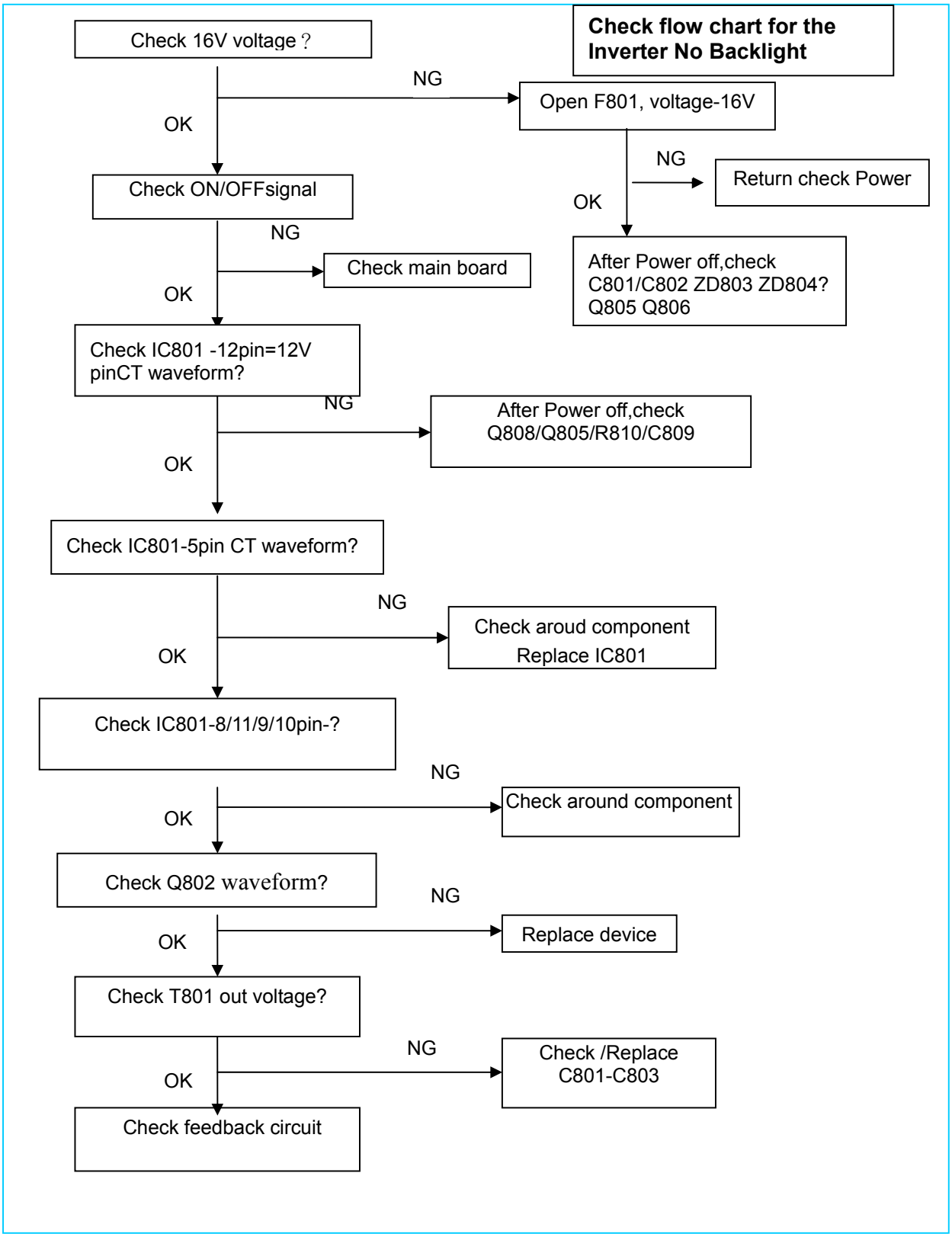

**Key Board---OSD no working**

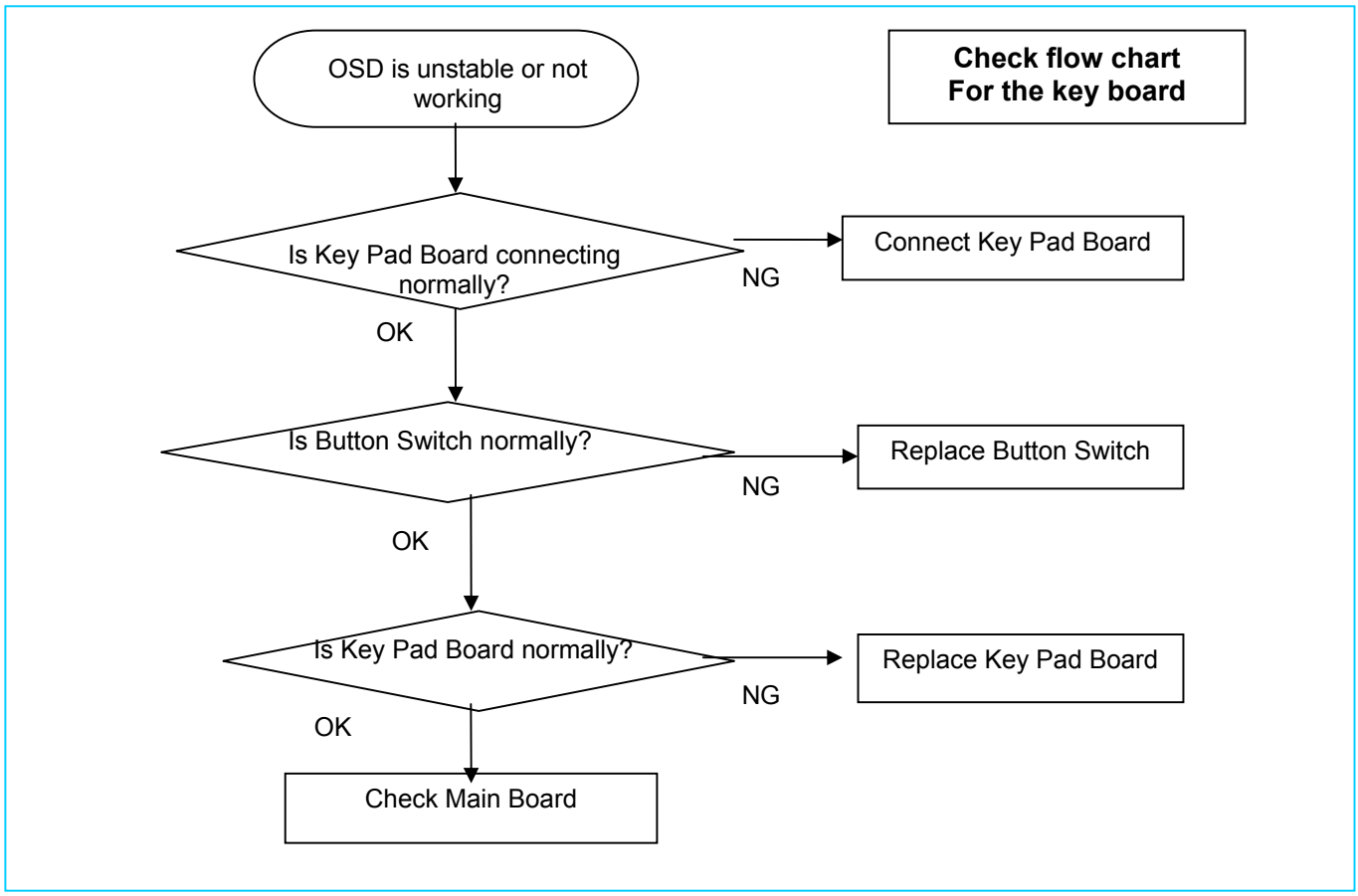


## 9.3 Factory mode adjustment

After replacing the Main board and the Panel, Check for enter the Factory mode ,then re-writing DDC is necessary.

Step:

Press MENU button↵ and hold,reinsert the Power cord , then ,press MENU , the monitor will may enter Factory OSD Menu. Then Press ↵ . Factory OSD Menu will appear in the screen.

By select this “F” button to enter Factory OSD Menu.

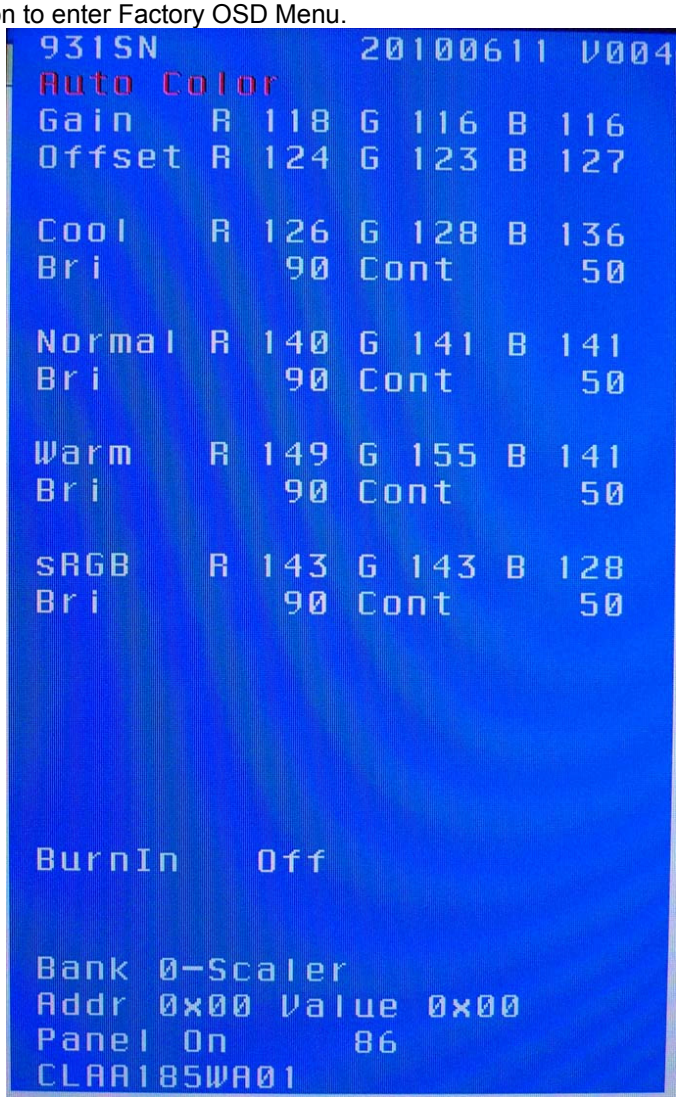


## 9.4 Writing DDC program step

After replacing the Main board and the Panel, Check if white-balance is within the specs ,then re-writing DDC is necessary.

1. Prepared the PC with Windows XP system, DDC recording device (12V)for figure below
2. Connect the DDC recording device and the PC through PC parallel port
3. setup “Port95nt” driver program to PC ,
4. select relevant program and run it, below figure will appear
5, Press “LoadFile”, select EDID -model of product, and select input port;
6. key in SN,and other informatiom, key-press “Pragram” button;

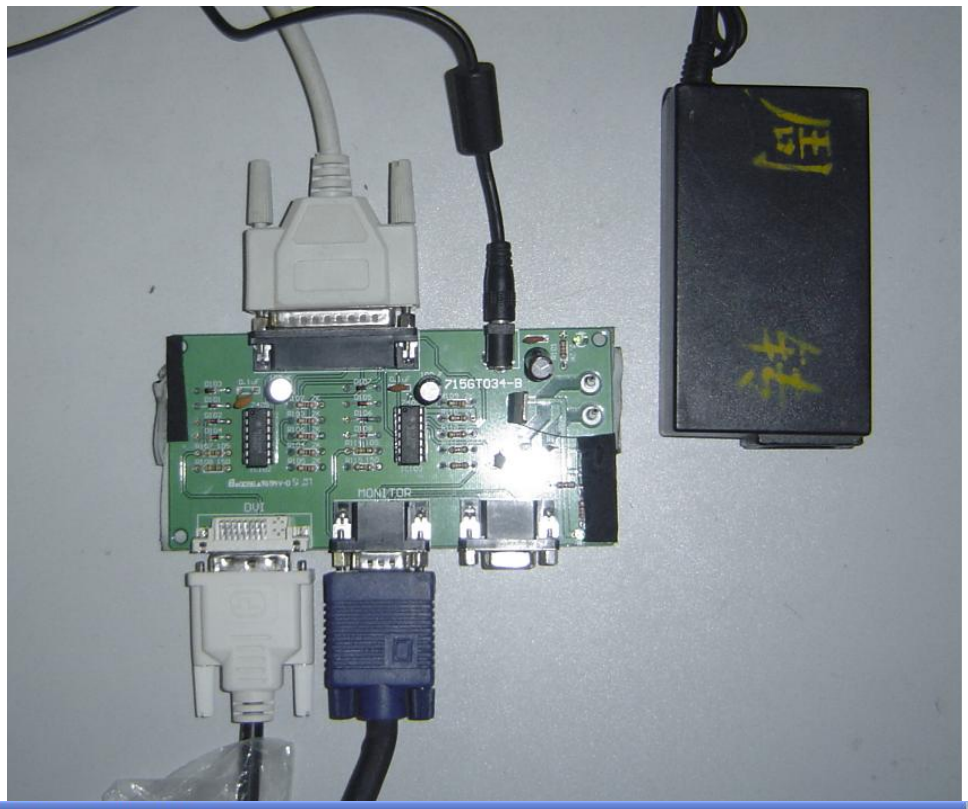
715GT034-B
MONITOR
DVI

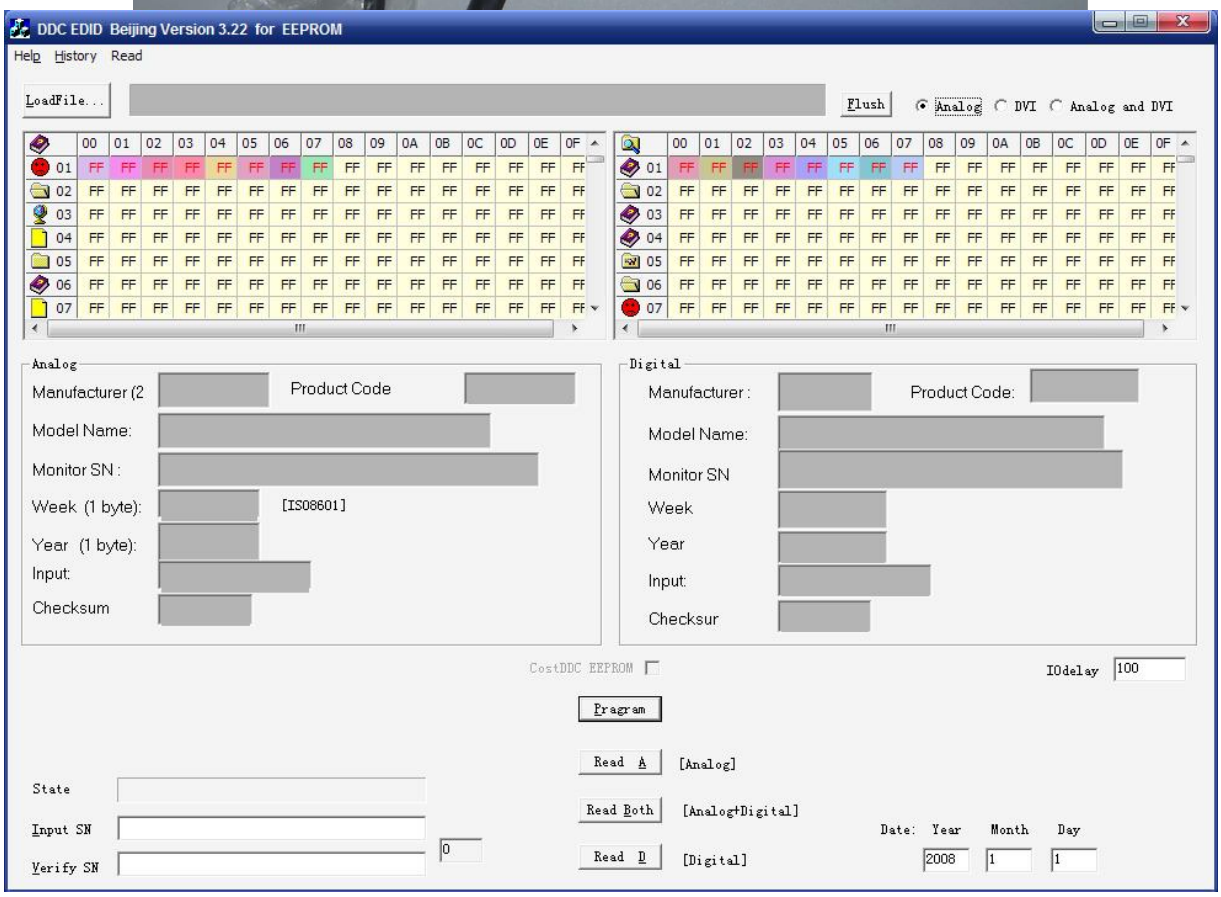
DDC EDID Beijing Version 3.22 for EEPROM
Help History Read
LoadFile...
Flush
Analog
DVI
Analog and DVI
Analog
Manufacturer (2
Product Code
Model Name:
Monitor SN :
Week (1 byte):
[ISO8601]
Year (1 byte):
Input:
Checksum
Digital
Manufacturer :
Product Code:
Model Name:
Monitor SN
Week
Year
Input:
Checksur
CostDDC EEPROM
IOdelay
100
Pragram
Read A
[Analog]
Read Both
[Analog+Digital]
Read D
[Digital]
State
Input SN
Verify SN
Date: Year Month Day
2008
1
1

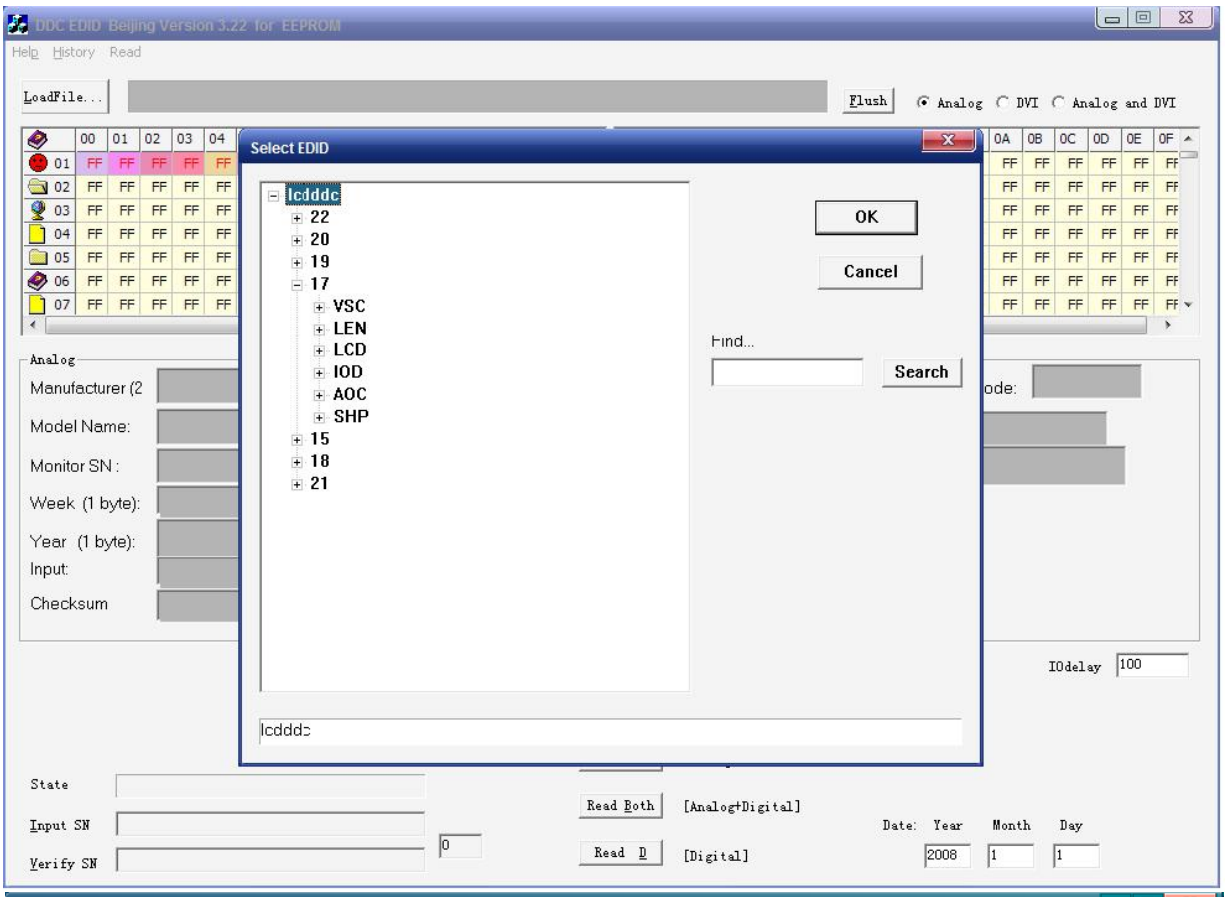
DDC EDID Beijing Version 3.22 for EEPROM
Help History Read
LoadFile...
Flush
Analog DVI Analog and DVI
Select EDID
lcdddc
22
20
19
17
VSC
LEN
LCD
IOD
AOC
SHP
15
18
21
OK
Cancel
Find...
Search
Analog
Manufacturer (2
Model Name:
Monitor SN :
Week (1 byte):
Year (1 byte):
Input:
Checksum
IOdelay 100
State
Input SN
Verify SN
Read Both [Analog+Digital]
Read D [Digital]
Date: Year Month Day
2008 1 1

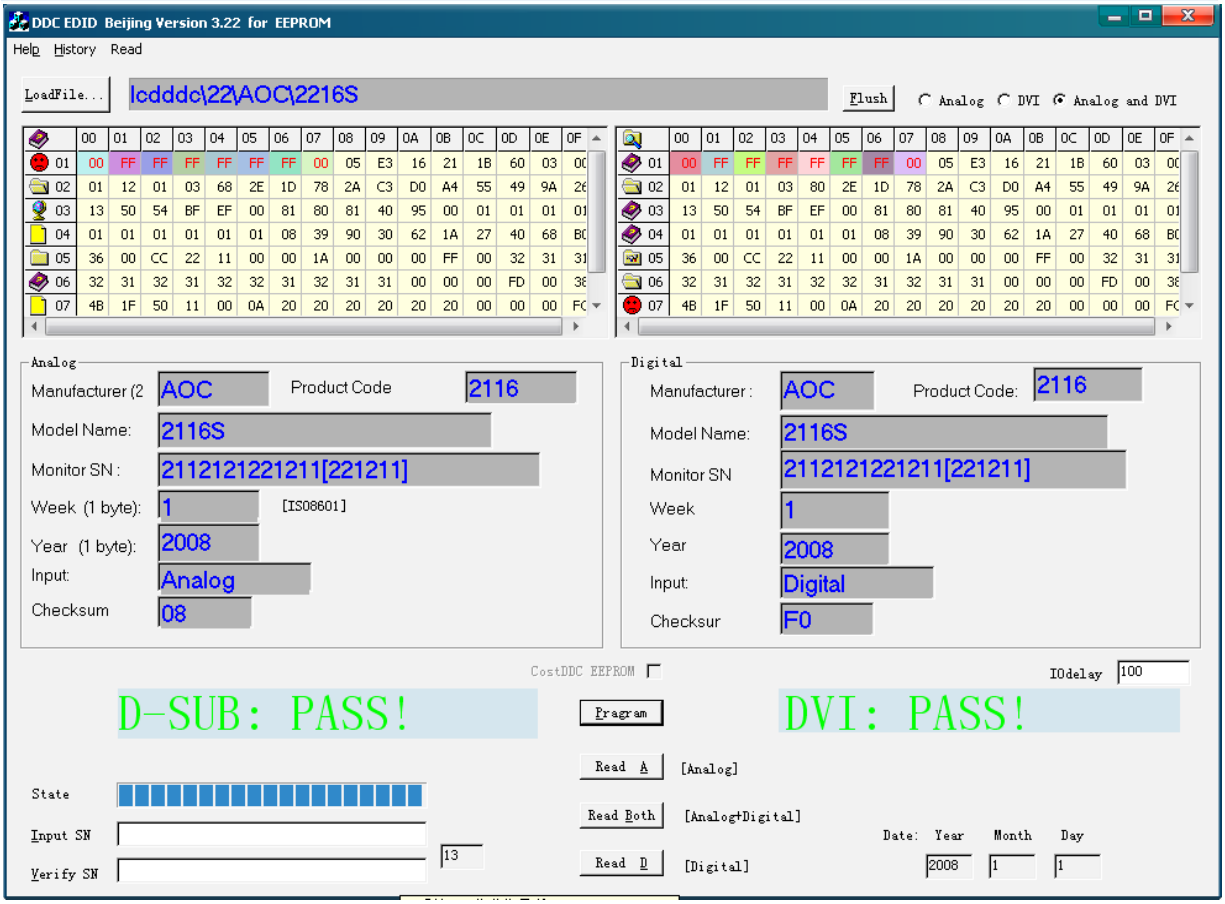
DDC EDID Beijing Version 3.22 for EEPROM
Help History Read
LoadFile...
lcdddc\22\AOC\2216S
Flush
Analog DVI Analog and DVI
Analog
Manufacturer (2 AOC
Product Code 2116
Model Name: 2116S
Monitor SN : 2112121221211[221211]
Week (1 byte): 1 [ISO8601]
Year (1 byte): 2008
Input: Analog
Checksum 08
Digital
Manufacturer : AOC
Product Code: 2116
Model Name: 2116S
Monitor SN 2112121221211[221211]
Week 1
Year 2008
Input: Digital
Checksur F0
CostDDC EEPROM
IOdelay 100
D-SUB: PASS!
Program
DVI: PASS!
Read A [Analog]
Read Both [Analog+Digital]
Read D [Digital]
State
Input SN
Verify SN
Date: Year Month Day
2008 1 1

# 10.BOM List

**Note: The parts information listed below are for reference only, and are subject to change without notice. Please go to http://cs.tpv.com.cn/hello1.asp for the latest information.**

## 10.1 Model：T8RCM5NBW5K2NNJ

| Location | Part number | Description | Remark |
|---|---|---|---|
| | 001G6022 1 | SCREW | 1 |
| | 040G 581 26704 | SHIPPING LABEL | 2nd source |
| | 040G 581689 4A | BARCODE LABEL FOR 1 | 3 |
| | 052G 1150 C | INSULATING TAPE | 8 |
| | 052G 1186 | SMALL TAPE | 8 |
| | 052G6019 1 | INSULATING TAPE | 12 |
| E08902 | 089G 725CAA DB | D-SUB CABLE | 2nd source |
| E08902 | 089G 725GAA DB | D-SUB CABLE | 2nd source |
| E08902 | 089G 725HAA DB | D-SUB CABLE | 1 |
| E08902 | 089G 725LAA DB | D-SUB CABLE | 2nd source |
| E08901 | 089G404A15N HL | AC POWER CORD 1500mm | 1 |
| E08901 | 089G404A15N IS | AC POWER CORD 1500MM Europe Reg. | 2nd source |
| E08901 | 089G404A15N YH | AC POWER CORD 1500MM Europe Reg. | 2nd source |
| E09502 | 095G8014 6WH02 | WIRE HARNESS 6P-6P | 1 |
| E09502 | 095G8014 6XH02 | WIRE HARNESS 6P(PH)-6P(PH) 140MM | 2nd source |
| E09501 | 095G8018 3DH39 | WIRE HARNESS 30P-14P 140mm | 2nd source |
| E09501 | 095G8018 3XH39 | LVDS CABLE | 1 |
| | 0M1G 130 5120 | SCREW | 4 |
| | 0M1G1030 6120 | SCREW M3X6 | 5 |
| | 0M1G1740 12 47 CR3 | SCREW | 3 |
| | 705GJ834016 | LCD 18.5" STAND ASS'Y | 1 |
| | 0Q1G 330 6120 | SCREW 42A9930001 | 3 |
| M03404 | Q34G0454AED 1B | STAND | 2nd source |
| M03404 | Q34G0454AED 1B9090 | STAND | 1 |
| | Q37G0101012 | HINGE(AOC 831Sw) | 1 |
| E750 | 750GLB185WA311N000 | PANEL CLAA185WA03 000 FQ CTOC | 2nd source |
| E750 | 750GLB185WA321N000 | PANEL CLAA185WA03 011 FQ CTOC | 2nd source |
| E750 | 750GLC185WA312N000 | PANEL CLAA185WA03 000 WJ CPT | 1 |
| E750 | 750GLC185WA313N000 | PANEL CLAA185WA03 000 FZ CPT | 2nd source |
| E750 | 750GLC185WA322N000 | PANEL CLAA185WA03 011 WJ CPT | 2nd source |
| E750 | 750GLC185WA323N000 | PANEL CLAA185WA03 011 FZ CPT | 2nd source |
| | 756GJ9CB AK002 | MCU ASS'Y Main BOARD CBPCRM5A2QQJ | |
| U402 | 056G1133 81 B | SST25VF020B-80-4C-SAE SOIC-8 | 2nd source |
| SMTCR-U402 | 100GAMC8008B11 | 831S+-TSUM1PFR-090820-V003-36EDID-6F2E | |
| | CBPCRM5A2QQJ | Main BOARD G2904-2-2-X-2-090206 | 1 |
| CN401 | 033G3802 6 | WAFER | 1 |
| CN404 | 033G3802 9 | WAFER 9P RIGHT ANELE PITCH | 1 |
| CN403 | 033G8027 14 H | WAFER 14P 2.0MM DIP | 1 |
| | 040G 45762412B | CBPC LABEL | 2 |
| CN101 | 088G 35315F H | D-SUB 15PIN | 2nd source |
| CN101 | 088G 35315F HD | D-SUB CONN F ATTACHED SCREW | 2nd source |
| CN101 | 088G 35315F HJ | SOC SUBD H 15P F | 2nd source |
| CN101 | 088G 35315F XH | D-SUB 15PIN VERTICAL CONN WITH SCREW | 1 |
| X401 | 093G 22 53 J | 14.31818MHZ/32PF/49US | 2nd source |
| X401 | 093G 22 53 YC | Crystal 14.31818MHz/32PF 49U/S YC | 1 |

| | | | |
|---|---|---|---|
| | SMTCRM5A2QQJ | MAIN BOARD | 1 |
| | 040G 45762420A | LABEL 25x6mm | 1 |
| U401 | 056G 562702 | IC TSUM1PLR-LF LQPF-64 MSTAR | 1 |
| U404 | 056G 563515 | IC AZ1117D-3.3TRG1 1A/3.3V TO-252 | 1 |
| U404 | 056G 563916 | IC LD1117DT33TR DPAK | 2nd source |
| U103 | 056G 662 13 | IC AZC099-04S SOT23-6L | 1 |
| U102 | 056G 662 13 | IC AZC099-04S SOT23-6L | 1 |
| U402 | 056G1133 81 B | SST25VF020B-80-4C-SAE SOIC-8 | 1 |
| Q404 | 057G 417 6 | PMBS3906/PHILIPS-SMT(06) | 2nd source |
| Q406 | 057G 417 12 T | KEC 2N3904S-RTK/PS | 1 |
| Q410 | 057G 417 22 T | TRA KN2907AS -60V/-0.6A SOT-23 | 1 |
| Q409 | 057G 417 22 T | TRA KN2907AS -60V/-0.6A SOT-23 | 1 |
| Q404 | 057G 417517 | Tra LMBT3906LT1G -200mA/-40V SOT-23 LRC | 1 |
| Q405 | 057G 763 1 | A03401 SOT23 BY AOS(A1) | 2nd source |
| Q401 | 057G 763 1 | A03401 SOT23 BY AOS(A1) | 1 |
| Q405 | 057G 763527 | FET APM2303A -30V/-4.3A SOT-23 ANPEC | 1 |
| R443 | 061G0402000 | RST CHIP MAX 0R05 1/16W | 1 |
| R457 | 061G0402000 | RST CHIP MAX 0R05 1/16W | 1 |
| R456 | 061G0402000 | RST CHIP MAX 0R05 1/16W | 1 |
| R402 | 061G0402000 | RST CHIP MAX 0R05 1/16W | 1 |
| R401 | 061G0402000 | RST CHIP MAX 0R05 1/16W | 1 |
| R102 | 061G0402101 | RST CHIPR 100 OHM +-5% 1/16W | 1 |
| R103 | 061G0402101 | RST CHIPR 100 OHM +-5% 1/16W | 1 |
| R104 | 061G0402101 | RST CHIPR 100 OHM +-5% 1/16W | 1 |
| R108 | 061G0402101 | RST CHIPR 100 OHM +-5% 1/16W | 1 |
| R110 | 061G0402101 | RST CHIPR 100 OHM +-5% 1/16W | 1 |
| R442 | 061G0402101 | RST CHIPR 100 OHM +-5% 1/16W | 1 |
| R420 | 061G0402101 | RST CHIPR 100 OHM +-5% 1/16W | 1 |
| R413 | 061G0402101 | RST CHIPR 100 OHM +-5% 1/16W | 1 |
| R412 | 061G0402101 | RST CHIPR 100 OHM +-5% 1/16W | 1 |
| R411 | 061G0402101 | RST CHIPR 100 OHM +-5% 1/16W | 1 |
| R405 | 061G0402101 | RST CHIPR 100 OHM +-5% 1/16W | 1 |
| R117 | 061G0402101 | RST CHIPR 100 OHM +-5% 1/16W | 1 |
| R115 | 061G0402101 | RST CHIPR 100 OHM +-5% 1/16W | 1 |
| R114 | 061G0402101 | RST CHIPR 100 OHM +-5% 1/16W | 1 |
| R113 | 061G0402101 | RST CHIPR 100 OHM +-5% 1/16W | 1 |
| R111 | 061G0402101 | RST CHIPR 100 OHM +-5% 1/16W | 1 |
| R441 | 061G0402102 | RST CHIPR 1 KOHM +-5% 1/16W | 1 |
| R118 | 061G0402102 | RST CHIPR 1 KOHM +-5% 1/16W | 1 |
| R409 | 061G0402103 | RST CHIPR 10 KOHM +-5% 1/16W | 1 |
| R458 | 061G0402103 | RST CHIPR 10 KOHM +-5% 1/16W | 1 |
| R439 | 061G0402103 | RST CHIPR 10 KOHM +-5% 1/16W | 1 |
| R437 | 061G0402103 | RST CHIPR 10 KOHM +-5% 1/16W | 1 |
| R433 | 061G0402103 | RST CHIPR 10 KOHM +-5% 1/16W | 1 |
| R421 | 061G0402103 | RST CHIPR 10 KOHM +-5% 1/16W | 1 |
| R417 | 061G0402103 | RST CHIPR 10 KOHM +-5% 1/16W | 1 |
| R408 | 061G0402103 | RST CHIPR 10 KOHM +-5% 1/16W | 1 |
| R407 | 061G0402103 | RST CHIPR 10 KOHM +-5% 1/16W | 1 |
| R404 | 061G0402103 | RST CHIPR 10 KOHM +-5% 1/16W | 1 |
| R121 | 061G0402103 | RST CHIPR 10 KOHM +-5% 1/16W | 1 |

| | | | |
|---|---|---|---|
| R120 | 061G0402103 | RST CHIPR 10 KOHM +-5% 1/16W | 1 |
| R436 | 061G0402104 | RST CHIPR 100 KOHM +-5% 1/16W | 1 |
| R410 | 061G0402121 | RST CHIP 120R 1/16W 5% | 1 |
| R414 | 061G0402220 | RST CHIPR 22 OHM +-5% 1/16W | 1 |
| R105 | 061G0402222 | RST CHIPR 2.2 KOHM +-5% 1/16W | 1 |
| R106 | 061G0402222 | RST CHIPR 2.2 KOHM +-5% 1/16W | 1 |
| R109 | 061G0402390 0F | RST CHIP 390R 1/16W 1% | 1 |
| R403 | 061G0402390 0F | RST CHIP 390R 1/16W 1% | 1 |
| R427 | 061G0402392 | RST CHIP 3.9K 1/16W 5% | 1 |
| R428 | 061G0402392 | RST CHIP 3.9K 1/16W 5% | 1 |
| R435 | 061G0402472 | RST CHIPR 4.7 KOHM +-5% 1/16W | 1 |
| R440 | 061G0402472 | RST CHIPR 4.7 KOHM +-5% 1/16W | 1 |
| R459 | 061G0402473 | RST CHIPR 47 KOHM +-5% 1/16W | 1 |
| R406 | 061G0402682 | RST CHIP 6K8 1/16W 5% | 1 |
| R107 | 061G0402750 | RST CHIPR 75 OHM +-5% 1/16W | 1 |
| R112 | 061G0402750 | RST CHIPR 75 OHM +-5% 1/16W | 1 |
| R116 | 061G0402750 | RST CHIPR 75 OHM +-5% 1/16W | 1 |
| R101 | 061G0603000 | RST CHIP MAX 0R05 1/10W | 1 |
| R434 | 061G1206331 | RST CHIPR 330 OHM +-5% 1/4W | 1 |
| C401 | 065G0402104 15 | MLCC 0402 0.1UF K 16V X5R | 1 |
| C403 | 065G0402104 15 | MLCC 0402 0.1UF K 16V X5R | 1 |
| C404 | 065G0402104 15 | MLCC 0402 0.1UF K 16V X5R | 1 |
| C406 | 065G0402104 15 | MLCC 0402 0.1UF K 16V X5R | 1 |
| C407 | 065G0402104 15 | MLCC 0402 0.1UF K 16V X5R | 1 |
| C409 | 065G0402104 15 | MLCC 0402 0.1UF K 16V X5R | 1 |
| C413 | 065G0402104 15 | MLCC 0402 0.1UF K 16V X5R | 1 |
| C414 | 065G0402104 15 | MLCC 0402 0.1UF K 16V X5R | 1 |
| C415 | 065G0402104 15 | MLCC 0402 0.1UF K 16V X5R | 1 |
| C416 | 065G0402104 15 | MLCC 0402 0.1UF K 16V X5R | 1 |
| C417 | 065G0402104 15 | MLCC 0402 0.1UF K 16V X5R | 1 |
| C419 | 065G0402104 15 | MLCC 0402 0.1UF K 16V X5R | 1 |
| C420 | 065G0402104 15 | MLCC 0402 0.1UF K 16V X5R | 1 |
| C422 | 065G0402104 15 | MLCC 0402 0.1UF K 16V X5R | 1 |
| C428 | 065G0402104 15 | MLCC 0402 0.1UF K 16V X5R | 1 |
| C432 | 065G0402104 15 | MLCC 0402 0.1UF K 16V X5R | 1 |
| C412 | 065G0402220 31 | CHIP 22PF 50V NPO | 1 |
| C411 | 065G0402220 31 | CHIP 22PF 50V NPO | 1 |
| C103 | 065G0402220 31 | CHIP 22PF 50V NPO | 1 |
| C102 | 065G0402220 31 | CHIP 22PF 50V NPO | 1 |
| C408 | 065G0402224 17 | CAP CER 0.22UF -20%-80% | 1 |
| C109 | 065G0402473 12 | CHIP 0.047uF 16V X7R | 1 |
| C113 | 065G0402473 12 | CHIP 0.047uF 16V X7R | 1 |
| C110 | 065G0402473 12 | CHIP 0.047uF 16V X7R | 1 |
| C101 | 065G0402473 12 | CHIP 0.047uF 16V X7R | 1 |
| C105 | 065G0402473 12 | CHIP 0.047uF 16V X7R | 1 |
| C106 | 065G0402473 12 | CHIP 0.047uF 16V X7R | 1 |
| C107 | 065G0402473 12 | CHIP 0.047uF 16V X7R | 1 |
| C104 | 065G0402509 31 | CHIP 5pF 50V NPO | 1 |
| C108 | 065G0402509 31 | CHIP 5pF 50V NPO | 1 |
| C111 | 065G0402509 31 | CHIP 5pF 50V NPO | 1 |

| | | | |
|---|---|---|---|
| FB402 | 071G 56K121 M | CHIP BEAD | 1 |
| FB401 | 071G 56V301 B | CHIP BEAD FCM2012VF-301T07 bullwill | 2nd source |
| FB401 | 071G 56V301 M | CHIP BEAD 2012 300 OHM | 1 |
| FB103 | 071G 59K190 B | 19 OHM BEAD | 1 |
| FB102 | 071G 59K190 B | 19 OHM BEAD | 1 |
| FB101 | 071G 59K190 B | 19 OHM BEAD | 1 |
| D403 | 093G 60230 | BAT54C(L43) | 1 |
| ZD104 | 093G 39S 34 T | UDZSNP5.6B ROHM | 2nd source |
| ZD103 | 093G 39S 34 T | UDZSNP5.6B ROHM | 2nd source |
| ZD103 | 093G 39S501 T | LUDZS5.6BT1G BY LRC | 1 |
| ZD104 | 093G 39S501 T | LUDZS5.6BT1G BY LRC | 1 |
| D402 | 093G3004 3 | SM340A | 1 |
| | 715G2904 2 2 | MAIN PCB FR-4 57x64x1.6mm DS | 1 |
| | AIGRM5A2QQJ | MAIN BOARD FOR AI | 1 |
| C410 | 067G 315100 7B | CAP 105C 10UF M 50V | 1 |
| C423 | 067G 315101 4B | CAP 105C 100UF M 25V | 2nd source |
| C421 | 067G 315101 4B | CAP 105C 100UF M 25V | 2nd source |
| C427 | 067G 315101 4B | CAP 105C 100UF M 25V | 2nd source |
| C426 | 067G 315101 4B | CAP 105C 100UF M 25V | 2nd source |
| C423 | 067G 3151014KB | EC 100uF M 25V 6.3*11 | 1 |
| C421 | 067G 3151014KB | EC 100uF M 25V 6.3*11 | 1 |
| C427 | 067G 3151014KB | EC 100uF M 25V 6.3*11 | 1 |
| C426 | 067G 3151014KB | EC 100uF M 25V 6.3*11 | 1 |
| | J07G 1 S132 | wooden pallet | 1 |
| | J11G 800 5 | 支撑钉 | 1 |
| | J40G 19T61529B | ID LABEL 831S+ | 2 |
| | J40G 58161511A | label 931Swl | 1 |
| | J41G780061554A | Service center list | 1 |
| | J41G780A615 9B | 931SW QSG | 1 |
| | J44G6000624 6A | EMPTY CARTON | 1 |
| | J44G6000624 7A | EMPTY CARTON | 1 |
| | J44G6002 S139 | paper plate | 1 |
| | J44G9003220 35 | CORNER PAPER | 1 |
| | J44G9903101 | EPS CUSHION | 1 |
| | J44G9903201 | EPS CUSHION | 1 |
| | J44G990361510B | CARTON | 1 |
| | J45G 77 6 | PE PACKING | 2 |
| | J45G 88626 1 R | PE BAG FOR MONITOR | 1 |
| | J52G 1185A3A | BIG TAPE FOR CARTON | 140 |
| | J52G 1185A3B | BIG TAPE FOR CARTON | 2nd source |
| | J70G900261522C | CD MANUAL | 1 |
| | KEPC7QF4J | KEY BOARD | 1 |
| CN001 | 033G3802 6H | WAFER 6P RIGHT ANGLE PITCH 2.0 | 2nd source |
| CN001 | 033G3802 6H L | CONNECTOR 6PIN | 1 |
| SW001 | 077G 602 1 CJ | TACT SWITCH | 1 |
| SW005 | 077G 602 1 CJ | TACT SWITCH | 1 |
| SW003 | 077G 602 1 CJ | TACT SWITCH | 1 |
| SW004 | 077G 602 1 CJ | TACT SWITCH | 1 |
| SW002 | 077G 602 1 CJ | TACT SWITCH | 1 |
| LED001 | 081G 122CT GH | Φ3 黄蓝双色弯脚型 LED | 1 |

| | | | |
|---|---|---|---|
| LED001 | 081G 122CT GP | LED GP34032C/G307-ZY-60 | 2nd source |
| | SMTKEPC7QF4J | KEY BOARD FOR AI | 1 |
| R003 | 061G0603000 | RST CHIP MAX 0R05 1/10W | 1 |
| R005 | 061G0603100 1F | RST CHIPR 1 KOHM +-1% 1/10W | 1 |
| R002 | 061G0603200 1F | RST CHIPR 2 KOHM +-1% 1/10W | 1 |
| R004 | 061G0603200 1F | RST CHIPR 2 KOHM +-1% 1/10W | 1 |
| J002 | 061G1206000 | RST CHIP MAX 0R05 1/4W | 1 |
| J001 | 061G1206000 | RST CHIP MAX 0R05 1/4W | 1 |
| | 715G2991 2 | KEY BOARD PCB FR-1 T:1.6MM 126X17MM | 1 |
| | PWPC8521VYD3J4 | G2852-3-4-X-2-090803 | 1 |
| CN802 | 033G8021 2E F | WAFER | 2nd source |
| CN801 | 033G8021 2E F | WAFER | 2nd source |
| CN802 | 033G8021 2E XY | CONNECTOR | 1 |
| CN801 | 033G8021 2E XY | CONNECTOR | 1 |
| | 040G 45762412B | CBPC LABEL | 2 |
| IC902 | 056G 139 10 | IC TLP781F photocoupler DIP-4 | 1 |
| IC902 | 056G 139 3A | IC PC123Y22FZ0F | 2nd source |
| NR901 | 061G 58080 N | RST NTCR 8OHM SHAGON | 1 |
| NR901 | 061G 58080 WT | 8 OHM NCT | 2nd source |
| C904 | 063G107K104 6 | 0.1UF +-10% | 2nd source |
| C904 | 063G107K104 U | 0.1UF/275V | 1 |
| C908 | 063G107K224 US | MPX. 0.22UF 250V +_10% | 1 |
| C908 | 063G107K2246S1 | X2 CAP 0.22UF K 275VAC | 2nd source |
| C801 | 065G 6J1806ET | 18PF 5% SL 6KV | 1 |
| C901 | 065G305M1022BP | Y2 1000PF M 250VAC Y5P | 1 |
| C902 | 065G305M1022BP | Y2 1000PF M 250VAC Y5P | 1 |
| C900 | 065G306M2222BP | 2200PF +-20% 250VAC | 1 |
| C907 | 067G 40Z10115X | 100μF 450V | 1 |
| C922 | 067G215D4714KV | E.C 105℃ CAP 470UF M 25V ED SERIES | 2nd source |
| C802 | 067G215D4714KV | E.C 105℃ CAP 470UF M 25V ED SERIES | 2nd source |
| C922 | 067G215D4714LV | LOW ESR EC 470uF 25V M 10*16mm | 2nd source |
| C802 | 067G215D4714LV | LOW ESR EC 470uF 25V M 10*16mm | 2nd source |
| C918 | 067G215D6814KV | CAP 105℃ 680uF M 25V | 2nd source |
| C917 | 067G215D6814KV | CAP 105℃ 680uF M 25V | 2nd source |
| C918 | 067G215D6814LV | LOW ESR EC 680uF 25V M 10*20mm | 1 |
| C917 | 067G215D6814LV | LOW ESR EC 680uF 25V M 10*20mm | 1 |
| C940 | 067G215P1024XV | CAP 105℃ 1000UF M 25V | 1 |
| C802 | 067G215P4714XV | CAP 105℃ 470UF M 25V | 1 |
| C922 | 067G215P4714XV | CAP 105℃ 470UF M 25V | 1 |
| C918 | 067G215P6814XV | CAP 105C 680UF M 25V | 2nd source |
| C917 | 067G215P6814XV | CAP 105C 680UF M 25V | 2nd source |
| C940 | 067G215S1024KV | EC 105℃ CAP 1000UF M 25V | 2nd source |
| C940 | 067G215S1024LV | LOW ESR EC 1000uF 25V M 12.5*20mm | 2nd source |
| C915 | 067G215S4713KV | EC 105℃ CAP 470UF M 16V | 1 |
| C915 | 067G215S4713LV | LOW ESR EC 470uF 16V M 10*12.5mm | 2nd source |
| L904 | 073G 253 91 V1 | CHOKE COIL 1.1uH | 1 |
| L903 | 073G 253 91 V1 | CHOKE COIL 1.1uH | 1 |
| L904 | 073G 253191 L | CHOKE COIL 1.1uH CC-007802 | 2nd source |
| L903 | 073G 253191 L | CHOKE COIL 1.1uH CC-007802 | 2nd source |
| L901 | 073L 174 40 HG | GBQM4.778.391 | 1 |

| | | | |
|---|---|---|---|
| L901 | 073L 174 40 NG | LINE FILTER 30mH | 2nd source |
| T801 | 080GL17T 40 DN | X'FMR TK.2001U.101 | 2nd source |
| T901 | 080GL19T 26 T | X'FMR 610uH SRW24LQL-T15H016 | 2nd source |
| CN901 | 087G 501 32 S | AC SOCKET | 1 |
| CN901 | 087G 501 32 DL | AC SOCKET DIP 3PIN+2PIN GROUND | 2nd source |
| BD901 | 093G 50460 28 | BRIDGE DIODE KBP208G LITEON | 1 |
| D905 | 093G 60519 | DIODE SR560 5A/60V DO-27 SECOS | 1 |
| D905 | 093G 60520 | DIODE SR5100 5A/100V DO-27 SECOS | 2nd source |
| D905 | 093G3006 1 1 | 31DQ06FC3 NIHON INTER | 2nd source |
| CN902 | 095G 82510D531 | 10P(SCN)-9P(PH) 100MM | 1 |
| CN902 | 095G 82510W531 | HARNESS 10P-9P 100MM | 2nd source |
| | 705GJA57003 | Q901 ASSY | 1 |
| | 051G 200 1 | OIL FOR DISAPPEAR | 2nd source |
| Q901 | 057G 667 30 | 2SK2645 | 2nd source |
| Q901 | 057G 667906 | MOSFET 9A/650V FMA09N65GX TO-220F | 2nd source |
| Q901 | 057G 667924 | MOSFET SMK0965F | 1 |
| Q901 | 057G 724 11 | STP9NK65ZFP | 2nd source |
| | 0M1G 930 8120 | SCREW | 1 |
| HS3 | Q90G6263 6 | HEAT SINK | 1 |
| | 705GQ893028 | D906 ASS'Y | 1 |
| | 051G 200 1 | OIL FOR DISAPPEAR | 2nd source |
| D906 | 093G 60239 | FME-210B T0-220 | 2nd source |
| D906 | 093G 60250 | FCH10U10 | 2nd source |
| D906 | 093G 60522 | diode MBR10150FCT PANJIT | 1 |
| | 0M1G 930 8120 | SCREW | 1 |
| HS2 | Q90G6263 6 | HEAT SINK | 1 |
| | PW8521VYD3SMTJ4 | POWER BOARD FOR SMT | 1 |
| IC801 | 056G 379 22 | IC TL494IDR SOIC-16 | 1 |
| IC901 | 056G 379107 | IC LD7575A PS SOP-8 | 1 |
| Q801 | 057G 417 4 | PMBS3904/PHILIPS-SMT(04) | 1 |
| Q806 | 057G 417 4 | PMBS3904/PHILIPS-SMT(04) | 1 |
| Q811 | 057G 417 4 | PMBS3904/PHILIPS-SMT(04) | 1 |
| Q903 | 057G 417 4 | PMBS3904/PHILIPS-SMT(04) | 1 |
| Q804 | 057G 417 6 | PMBS3906/PHILIPS-SMT(06) | 1 |
| Q812 | 057G 417 6 | PMBS3906/PHILIPS-SMT(06) | 1 |
| Q801 | 057G 417 12 T | KEC 2N3904S-RTK/PS | 2nd source |
| Q806 | 057G 417 12 T | KEC 2N3904S-RTK/PS | 2nd source |
| Q811 | 057G 417 12 T | KEC 2N3904S-RTK/PS | 2nd source |
| Q903 | 057G 417 12 T | KEC 2N3904S-RTK/PS | 2nd source |
| Q812 | 057G 417 13 T | KEC 2N3906S-RTK/PS | 2nd source |
| Q804 | 057G 417 13 T | KEC 2N3906S-RTK/PS | 2nd source |
| Q903 | 057G 417511 | MMBT3904 | 2nd source |
| Q811 | 057G 417511 | MMBT3904 | 2nd source |
| Q806 | 057G 417511 | MMBT3904 | 2nd source |
| Q801 | 057G 417511 | MMBT3904 | 2nd source |
| Q812 | 057G 417512 | MMBT3906 | 2nd source |
| Q804 | 057G 417512 | MMBT3906 | 2nd source |
| Q802 | 057G 600 55 | P5506 HVG SO-8 | 2nd source |
| Q809 | 057G 759 2 | RK7002FD5T116 SOT-23 BY ROHM | 2nd source |
| Q808 | 057G 760 4A | DTA144WN3/S SOT-23 | 1 |

| | | | |
|---|---|---|---|
| Q805 | 057G 760 5A | DTC 144WN3/S SOT-23 | 1 |
| Q802 | 057G 763 14 | AM9945N | 2nd source |
| Q809 | 057G 763511 | MOSFET SRK7002LT1G SOT-23 LRC | 1 |
| Q802 | 057G 763525 | APM9948K | 1 |
| R823 | 061G0603000 | RST CHIP MAX 0R05 1/10W | 1 |
| R926 | 061G0603100 1F | RST CHIPR 1 KOHM +-1% 1/10W | 1 |
| R942 | 061G0603100 1F | RST CHIPR 1 KOHM +-1% 1/10W | 1 |
| R818 | 061G0603100 1F | RST CHIPR 1 KOHM +-1% 1/10W | 1 |
| R824 | 061G0603100 1F | RST CHIPR 1 KOHM +-1% 1/10W | 1 |
| R827 | 061G0603100 1F | RST CHIPR 1 KOHM +-1% 1/10W | 1 |
| R863 | 061G0603100 2F | RST CHIPR 10K OHM +-1% 1/10W | 1 |
| R828 | 061G0603100 2F | RST CHIPR 10K OHM +-1% 1/10W | 1 |
| R820 | 061G0603100 2F | RST CHIPR 10K OHM +-1% 1/10W | 1 |
| R832 | 061G0603100 2F | RST CHIPR 10K OHM +-1% 1/10W | 1 |
| R807 | 061G0603100 2F | RST CHIPR 10K OHM +-1% 1/10W | 1 |
| R808 | 061G0603100 2F | RST CHIPR 10K OHM +-1% 1/10W | 1 |
| R817 | 061G0603100 2F | RST CHIPR 10K OHM +-1% 1/10W | 1 |
| R862 | 061G0603105 | RST CHIPR 1M OHM +-5% 1/10W | 1 |
| R814 | 061G0603150 1F | RST CHIPR 1.5 KOHM +-1% 1/10W | 1 |
| R801 | 061G0603150 1F | RST CHIPR 1.5 KOHM +-1% 1/10W | 1 |
| R930 | 061G0603243 1F | RST CHIPR 2.43K OHM +-1% 1/10W | 1 |
| R940 | 061G0603330 2F | RST CHIPR 33K OHM +-1% 1/10W | 1 |
| R927 | 061G0603360 1F | RST CHIPR 3.6K OHM +-1% 1/10W | 1 |
| R802 | 061G0603680 1F | RST CHIPR 6.8 KOHM +-1% 1/10W | 1 |
| R851 | 061G0603680 1F | RST CHIPR 6.8 KOHM +-1% 1/10W | 1 |
| R841 | 061G0603680 2F | RST CHIPR 68K OHM +-1% 1/10W | 1 |
| R853 | 061G0603683 | RST CHIPR 68K OHM +-5% 1/10W | 1 |
| R803 | 061G0603684 | RST CHIPR 680 KOHM +-5% 1/10W | 1 |
| JR902 | 061G0805000 | RST CHIP MAX 0R05 1/8W | 1 |
| R608 | 061G0805000 JF | RST CHIPR 0 OHM +-5% 1/8W FENGHUA | 1 |
| R608 | 061G0805000 JT | RST CHIPR 0 OHM +- 5% 1/8W TZAI YUAN | 2nd source |
| R608 | 061G0805000 JY | RST CHIPR MAX 0R05 OHM 1/8W YAGEO | 2nd source |
| R831 | 061G0805100 1F | RST CHIPR 1K OHM +-1% 1/8W | 1 |
| R822 | 061G0805100 1F | RST CHIPR 1K OHM +-1% 1/8W | 1 |
| R821 | 061G0805100 1F | RST CHIPR 1K OHM +-1% 1/8W | 1 |
| R915 | 061G08051003FF | RST CHIPR 100KOHM +-1% 1/8W FENGHUA | 1 |
| R915 | 061G08051003FY | RST CHIPR 100KOHM +-1% 1/8W YAGEO | 2nd source |
| R804 | 061G0805101 | 1ST CHIPR 100 OHM +-5% 1/8W | 1 |
| R826 | 061G0805102 | RST CHIPR 1K OHM +-5% 1/8W | 1 |
| R925 | 061G0805102 | RST CHIPR 1K OHM +-5% 1/8W | 1 |
| R939 | 061G0805102 | RST CHIPR 1K OHM +-5% 1/8W | 1 |
| R938 | 061G0805103 | RST CHIPR 10K OHM +-5% 1/8W | 1 |
| R924 | 061G08051500FF | RST CHIPR 150OHM +-1% 1/8W FENGHUA | 2nd source |
| R924 | 061G08051500FT | RST CHIPR 150 OHM +-5% 1/8W | 1 |
| R825 | 061G0805220 | RST CHIPR 22 OHM +-5% 1/8W | 1 |
| R829 | 061G0805220 | RST CHIPR 22 OHM +-5% 1/8W | 1 |
| R839 | 061G0805220 | RST CHIPR 22 OHM +-5% 1/8W | 1 |
| R850 | 061G0805220 | RST CHIPR 22 OHM +-5% 1/8W | 1 |
| R943 | 061G0805471 JT | RST CHIPR 470OHM +-5% 1/8W TZAI YUAN | 1 |
| R943 | 061G0805471 JY | RST CHIPR 470OHM +-5% 1/8W YAGEO | 2nd source |

| | | | |
|---|---|---|---|
| R837 | 061G0805473 | RST CHIPR 47K OHM +-5% 1/8W | 1 |
| R810 | 061G0805510 2F | RST CHIPR 51K OHM +-1% 1/8W | 1 |
| JR801 | 061G1206000 | RST CHIP MAX 0R05 1/4W | 1 |
| F801 | 061G1206000 4 | RST CHIP MAX 0R05 1/4W | 1 |
| F905 | 061G1206000 4 | RST CHIP MAX 0R05 1/4W | 1 |
| R962 | 061G1206101 | RST CHIPR 100 OHM +-5% 1/4W | 1 |
| R961 | 061G1206101 | RST CHIPR 100 OHM +-5% 1/4W | 1 |
| R935 | 061G1206101 | RST CHIPR 100 OHM +-5% 1/4W | 1 |
| R920 | 061G1206101 | RST CHIPR 100 OHM +-5% 1/4W | 1 |
| R919 | 061G1206101 | RST CHIPR 100 OHM +-5% 1/4W | 1 |
| R918 | 061G1206101 | RST CHIPR 100 OHM +-5% 1/4W | 1 |
| R904 | 061G1206103 | RST CHIPR 10K OHM +-5% 1/4W | 1 |
| R932 | 061G1206103 | RST CHIPR 10K OHM +-5% 1/4W | 1 |
| R855 | 061G1206150 | RST CHIPR 15 OHM +-5% 1/4W | 1 |
| R856 | 061G1206150 | RST CHIPR 15 OHM +-5% 1/4W | 1 |
| R910 | 061G1206220 JF | RST CHIPR 22 OHM +-5% 1/4W FENGHUA | 2nd source |
| R910 | 061G1206220 JT | RST CHIPR 22 OHM +-5% 1/4W TZAI YUAN | 1 |
| R910 | 061G1206220 JY | RST CHIPR 22R +-5% 1/4W YAGEO | 2nd source |
| R912 | 061G1206221 | RST CHIPR 220 OHM +-5% 1/4W | 1 |
| R909 | 061G1206519 | RST CHIPR 5.1 OHM +-5% 1/4W | 1 |
| R900 | 061G1206684 | RST CHIPR 680K OHM +-5% 1/4W | 1 |
| R901 | 061G1206684 | RST CHIPR 680K OHM +-5% 1/4W | 1 |
| R902 | 061G1206684 | RST CHIPR 680K OHM +-5% 1/4W | 1 |
| C932 | 065G0603102 32 | 1000PF +-10% 50V X7R | 1 |
| C834 | 065G0603103 22 | CHIP 10NF 25V X7R 0603 | 1 |
| C842 | 065G0603103 32 | CAP CHIP 0603 0.01UF K 50V X7R | 1 |
| C807 | 065G0603104 22 | CAP CHIP 0603 0.1UF K 25V X7R | 1 |
| C821 | 065G0603104 22 | CAP CHIP 0603 0.1UF K 25V X7R | 1 |
| C825 | 065G0603104 22 | CAP CHIP 0603 0.1UF K 25V X7R | 1 |
| C819 | 065G0603222 22 | CHIP 2200PF 25V X7R | 1 |
| C823 | 065G0603222 22 | CHIP 2200PF 25V X7R | 1 |
| C928 | 065G0805103 32 | CAP CHIP 0805 10NF K 50V X7R | 1 |
| C931 | 065G0805104 32 | CAP CHIP 0805 0.1uF K 50V X7R | 1 |
| C930 | 065G0805104 32 | CAP CHIP 0805 0.1uF K 50V X7R | 1 |
| C924 | 065G0805104 32 | CAP CHIP 0805 0.1uF K 50V X7R | 1 |
| C911 | 065G0805104 32 | CAP CHIP 0805 0.1uF K 50V X7R | 1 |
| C824 | 065G0805104 32 | CAP CHIP 0805 0.1uF K 50V X7R | 1 |
| C822 | 065G080510522K 3 | CAP CHIP 0805 1U 25V X7R +/-10% | 2nd source |
| C822 | 065G080510522K T | CAP CHIP 0805 1UF K 25V X7R | 1 |
| C839 | 065G080515231J F | CAP CHIP 0805 1500PF J 50V NPO | 2nd source |
| C838 | 065G080515231J F | CAP CHIP 0805 1500PF J 50V NPO | 2nd source |
| C838 | 065G080515231J Y | CAP CHIP 0805 1N5 50V NPO +/-5% | 1 |
| C839 | 065G080515231J Y | CAP CHIP 0805 1N5 50V NPO +/-5% | 1 |
| C820 | 065G080522131G F | CAP 0805 220PF 2% 50V NPO | 1 |
| C820 | 065G080522131G Y | CAP CHIP 0805 220pF 2% 50V NPO | 2nd source |
| C845 | 065G080522512K 3 | CAP CHIP 0805 2U2 16V X7R +/-10% | 2nd source |
| C845 | 065G080522512K M | MLCC 0805 CAP 2.2uF 16V X7R | 2nd source |
| C845 | 065G080522512K T | CAP CHIP 0805 2.2UF K 16V X7R | 1 |
| C909 | 065G0805471 21 | CAP CHIP 0805 470PF J 25V NPO | 1 |
| C929 | 065G1206102 72 | CAP CHIP 1206 1000PF K 500V X7R | 1 |

| | | | |
|---|---|---|---|
| C912 | 065G1206102 72 | CAP CHIP 1206 1000PF K 500V X7R | 1 |
| D805 | 093G 6432P | LL4148 | 1 |
| D806 | 093G 6432P | LL4148 | 1 |
| D807 | 093G 6432P | LL4148 | 1 |
| D812 | 093G 6432P | LL4148 | 1 |
| D814 | 093G 6432P | LL4148 | 1 |
| D817 | 093G 6432P | LL4148 | 1 |
| D903 | 093G 6432P | LL4148 | 1 |
| D915 | 093G 6432P | LL4148 | 1 |
| D916 | 093G 6432P | LL4148 | 1 |
| D801 | 093G 6433S | DIODE BAV99 SEMTECH | 1 |
| D802 | 093G 6433S | DIODE BAV99 SEMTECH | 1 |
| ZD922 | 093G 39S 25 T | RLZ5.1B LLDS | 1 |
| ZD902 | 093G 39S 40 T | RLZ 13B LLDS | 1 |
| ZD921 | 093G 39S 40 T | RLZ 13B LLDS | 1 |
| | PW8521VYD3AIJ4 | POWER BOARD FOR AI | 1 |
| CN901 | 006G 31500 | EYELET | 2 |
| | 040G 45762420A | LABEL 25x6mm | 1 |
| IC903 | 056G 158 10 T | IC AS431AZTR-E1 TO-92 | 1 |
| IC903 | 056G 158 12 | KIA431A-AT/P TO-92 | 2nd source |
| R908 | 061G152M10452T | RST MOFR 100KOHM +-5% 2WS | 1 |
| R946 | 061G152M47152T | RST MOFR 470 OHM +-5% 2WS | 1 |
| R914 | 061G152M47852T | RST MOFR 0.47 OHM +-5% 2WS | 1 |
| C906 | 065G 2K152 2T6213 | CAP CER 1500PF K 2KV | 2nd source |
| C906 | 065G 2K152 2T6921 | CAP CER 1500pF K 2KV Y5P | 1 |
| C903 | 067G 2152207NT | KY50VB22M-TP5 5*11 | 2nd source |
| C903 | 067G215Y2207KT | CAP 105℃ 22UF M 50V KINGNICHI | 1 |
| F901 | 084G 56 3 B | FUSE 3.15A 250V | 1 |
| F901 | 084G 56 3W | FUSE | 2nd source |
| D900 | 093G 6026T52T | RECTIFIER DIODE FR107 | 1 |
| D900 | 093G 6026W52T | FR107 | 2nd source |
| D901 | 093G 6038P52T | PS102R | 2nd source |
| D901 | 093G 6038T52T | FR103 | 1 |
| J813 | 095G 90 23 | JUMPER WIRE | 1 |
| J812 | 095G 90 23 | JUMPER WIRE | 1 |
| J811 | 095G 90 23 | JUMPER WIRE | 1 |
| J809 | 095G 90 23 | JUMPER WIRE | 1 |
| J807 | 095G 90 23 | JUMPER WIRE | 1 |
| J806 | 095G 90 23 | JUMPER WIRE | 1 |
| J804 | 095G 90 23 | JUMPER WIRE | 1 |
| J805 | 095G 90 23 | JUMPER WIRE | 1 |
| FB602 | 095G 90 23 | JUMPER WIRE | 1 |
| C803 | 095G 90 23 | JUMPER WIRE | 1 |
| J914 | 095G 90 23 | JUMPER WIRE | 1 |
| J912 | 095G 90 23 | JUMPER WIRE | 1 |
| J911 | 095G 90 23 | JUMPER WIRE | 1 |
| J910 | 095G 90 23 | JUMPER WIRE | 1 |
| J909 | 095G 90 23 | JUMPER WIRE | 1 |
| J908 | 095G 90 23 | JUMPER WIRE | 1 |
| J907 | 095G 90 23 | JUMPER WIRE | 1 |

| | | | |
|---|---|---|---|
| J906 | 095G 90 23 | JUMPER WIRE | 1 |
| J904 | 095G 90 23 | JUMPER WIRE | 1 |
| J903 | 095G 90 23 | JUMPER WIRE | 1 |
| J901 | 095G 90 23 | JUMPER WIRE | 1 |
| J803 | 095G 90 23 | JUMPER WIRE | 1 |
| J802 | 095G 90 23 | JUMPER WIRE | 1 |
| J801 | 095G 90 23 | JUMPER WIRE | 1 |
| | 715G2852 3 4 | POWER-PCB FR-1 193*122*1.6MM 94V-0 SS | 1 |
| | Q51G 6 4509 | GLUE_RTV | 2 |
| | Q51G 100510500 GP | GLUE_RE-WET | 2nd source |
| T801 | S80GL17T40V | 变压器 ASS'Y | 1 |
| T901 | S80GL19T26V1 | Transformer ASS'Y | 1 |
| | Q12G6600 6 | FOOT | 4 |
| | Q15G0357101 | MAINFRAME FOR CPT/AU PANEL L185-831_AOC | 1 |
| M03301 | Q33G0188AED 1L | KEY PAD | 1 |
| M03302 | Q33G0189 1 1C | LENS | 1 |
| M03406 | Q34G0358BBM 1L | LOGO LOOP | 2nd source |
| M03406 | Q34G0358BBM 1L7841 | 18.5"LOGO LOOP/装饰圈 | 1 |
| M03405 | Q34G0360AED 1L | BASE | 2nd source |
| M03405 | Q34G0360AED 1L7841 | 18.5" BASE/底座 | 1 |
| M03401 | Q34G0452AEDB1B | BEZEL 18.5" | 2nd source |
| M03401 | Q34G0452AEDB1B9090 | BEZEL 18.5" | 1 |
| M03402 | Q34G0453ABJA1B | REAR COVER 18.5" | 2nd source |
| M03402 | Q34G0453ABJA1B9090 | REAR COVER 18.5" | 1 |
| M03403 | Q34G0455AED 1B | STAND COVER | 2nd source |
| M03403 | Q34G0455AED 1B9090 | STAND COVER | 1 |
| E09501 | S95G80183H39 | LVDS ASS'Y | 2nd source |
| | | | |
| | | | |
| | | | |
| | | | |
| | | | |
| | | | |
| | | | |
| | | | |
| | | | |
| | | | |
| | | | |
| | | | |